XPS-4385W-DXXXG **(RoHS Compliant)**

8.5 Gbps / 80 km / 50GHz DWDM XFP Single-Mode Optical Transceiver for 8G FC Applications

FEATURES

- Up to 8.5 Gb/s Bi-directional Data Link
- Complaint with XFP MSA
- Compliant with Fiber Channel FC-PI-4 800-SN-LL-V
- Compliant with 4G, 2G Fiber Channel
- SFF-8472 Digital Diagnostic Function
- Maximum Link Length of 80 km
- Temperature-stabilized DWDM EML Transmitter
- 50GHz ITU Grid, C Band
- AC/AC Coupling according to MSA
- 2-Wire Interface for Integrated Digital Diagnostic Monitoring
- XFI Loopback Mode
- No reference Clock required
- Power Dissipation < 3.5 W
- +3.3 V & 5V Power Supply
- RoHS Compliant
- 0 to 70°C Operating

APPLICATIONS

- Multi-rate 8x/4x/2x Fibre Channel

STANDARD

- Compliant with XFP MSA
- Compliant with 8GFC

LASER SAFETY

This single-mode transceiver is a Class 1 laser product. It complies with IEC-60825 and FDA 21 CFR 1040.10 and 1040.11. The transceiver must be operated within the specified temperature and voltage limits. The optical ports of the module shall be terminated with an optical connector or with a dust plug.

DESCRIPTION

XPS-4385W-DXXXG series multi-rate 8G XFP transceivers are designed for serial optical data communications such as 8G Fibre Channel. It supports the 8.5Gbps transmission on 9/125 µm SMF.

This module is designed for single mode fiber and operates at a nominal wavelength of 50GHz ITU Grid, C Band DWDM wavelength. The transmitter section consists of a temperature-stabilized DWDM electrical-modulated laser (EML), driver and signal conditioner. The receiver section incorporates an avalanche photodiode (APD) integrated with a trans-impedance preamplifier (TIA) and signal conditioner.

The module is with the XFP 30-pin connector to allow hot plug capability. Integrated Tx and Rx signal conditioners provide high jitter-tolerance for full XFI compliance and no external reference clock required. The internally ac coupled high speed serial I/O simplifies interfacing to external circuitry. Dual 5V and 3.3V power supply are used. The optical output can be disabled by LVTTL logic high-level input of TX_DIS. Loss of signal (RX_LOS) output is provided to indicate the loss of an input optical signal of receiver.

A serial EEPROM in the transceiver allows the user to access transceiver digital diagnostic monitoring and configuration data via the 2-wire XFP Management Interface. This interface uses a single address, A0h, with a memory map divided into a lower and upper area. Basic digital diagnostic data is held in the lower area while specific data is held in a series of tables in the high memory area.

ORDER INFORMATION

P/No.	Bit Rate (Gb/s)	FC-PI	Distance (km)	Spacing (GHz)	Wavelength (nm)	Package	Case Temp (°C)	RoHS Compliant
XPS-4385W-DXXXG	8 /4 /2	FC-PI-4	80	50	DWDM*	XFP with DMI	0 to 70	Yes

*XXX: 50GHz ITU Grid wavelength (Please see below)

Channel #	Product code	Frequency (THz)	Center Wavelength (nm)	Label
190	XPS-4385W-D190G	191.90	1562.23	190
195	XPS-4385W-D195G	191.95	1561.83	195
200	XPS-4385W-D200G	192.00	1561.42	200
205	XPS-4385W-D205G	192.05	1561.01	205
210	XPS-4385W-D210G	192.10	1560.61	210
215	XPS-4385W-D215G	192.15	1560.20	215
220	XPS-4385W-D220G	192.20	1559.79	220
225	XPS-4385W-D225G	192.25	1559.39	225
230	XPS-4385W-D230G	192.30	1558.98	230
235	XPS-4385W-D235G	192.35	1558.58	235
240	XPS-4385W-D240G	192.40	1558.17	240
245	XPS-4385W-D245G	192.45	1557.77	245
250	XPS-4385W-D250G	192.50	1557.36	250
255	XPS-4385W-D255G	192.55	1556.96	255
260	XPS-4385W-D260G	192.60	1556.55	260
265	XPS-4385W-D265G	192.65	1556.15	265
270	XPS-4385W-D270G	192.70	1555.75	270
275	XPS-4385W-D275G	192.75	1555.34	275
280	XPS-4385W-D280G	192.80	1554.94	280
285	XPS-4385W-D285G	192.85	1554.54	285
290	XPS-4385W-D290G	192.90	1554.13	290
295	XPS-4385W-D295G	192.95	1553.73	295
300	XPS-4385W-D300G	193.00	1553.33	300
305	XPS-4385W-D305G	193.05	1552.93	305
310	XPS-4385W-D310G	193.10	1552.52	310
315	XPS-4385W-D315G	193.15	1552.12	315
320	XPS-4385W-D320G	193.20	1551.72	320
325	XPS-4385W-D325G	193.25	1551.32	325
330	XPS-4385W-D330G	193.30	1550.92	330
335	XPS-4385W-D335G	193.35	1550.52	335
340	XPS-4385W-D340G	193.40	1550.12	340
345	XPS-4385W-D345G	193.45	1549.72	345
350	XPS-4385W-D350G	193.50	1549.32	350
355	XPS-4385W-D355G	193.55	1548.91	355
360	XPS-4385W-D360G	193.60	1548.51	360
365	XPS-4385W-D365G	193.65	1548.11	365
370	XPS-4385W-D370G	193.70	1547.72	370
375	XPS-4385W-D375G	193.75	1547.32	375
380	XPS-4385W-D380G	193.80	1546.92	380
385	XPS-4385W-D385G	193.85	1546.52	385
390	XPS-4385W-D390G	193.90	1546.12	390
395	XPS-4385W-D395G	193.95	1545.72	395
400	XPS-4385W-D400G	194.00	1545.32	400
405	XPS-4385W-D405G	194.05	1544.92	405
410	XPS-4385W-D410G	194.10	1544.53	410
415	XPS-4385W-D415G	194.15	1544.13	415
420	XPS-4385W-D420G	194.20	1543.73	420
425	XPS-4385W-D425G	194.25	1543.33	425
430	XPS-4385W-D430G	194.30	1542.94	430
435	XPS-4385W-D435G	194.35	1542.54	435
440	XPS-4385W-D440G	194.40	1542.14	440
445	XPS-4385W-D445G	194.45	1541.75	445

OPTOWAY TECHNOLOGY INC. No.38, Kuang Fu S. Road, Hu Kou, Hsin Chu Industrial Park, Hsin Chu, Taiwan 303
Tel: 886-3-5979798 Fax: 886-3-5979737
E-mail: sales@optoway.com http: // www.optoway.com

Channel #	Product code	Frequency (THz)	Center Wavelength (nm)	Label
450	XPS-4385W-D450G	194.50	1541.35	450
455	XPS-4385W-D455G	194.55	1540.95	455
460	XPS-4385W-D460G	194.60	1540.56	460
465	XPS-4385W-D465G	194.65	1540.16	465
470	XPS-4385W-D470G	194.70	1539.77	470
475	XPS-4385W-D475G	194.75	1539.37	475
480	XPS-4385W-D480G	194.80	1538.98	480
485	XPS-4385W-D485G	194.85	1538.58	485
490	XPS-4385W-D490G	194.90	1538.19	490
495	XPS-4385W-D495G	194.95	1537.79	495
500	XPS-4385W-D500G	195.00	1537.40	500
505	XPS-4385W-D505G	195.05	1537.00	505
510	XPS-4385W-D510G	195.10	1536.61	510
515	XPS-4385W-D515G	195.15	1536.22	515
520	XPS-4385W-D520G	195.20	1535.82	520
525	XPS-4385W-D525G	195.25	1535.43	525
530	XPS-4385W-D530G	195.30	1535.04	530
535	XPS-4385W-D535G	195.35	1534.64	535
540	XPS-4385W-D540G	195.40	1534.25	540
545	XPS-4385W-D545G	195.45	1533.86	545
550	XPS-4385W-D550G	195.50	1533.47	550
555	XPS-4385W-D555G	195.55	1533.07	555
560	XPS-4385W-D560G	195.60	1532.68	560
565	XPS-4385W-D565G	195.65	1532.29	565
570	XPS-4385W-D570G	195.70	1531.90	570
575	XPS-4385W-D575G	195.75	1531.51	575
580	XPS-4385W-D580G	195.80	1531.12	580
585	XPS-4385W-D585G	195.85	1530.72	585
590	XPS-4385W-D590G	195.90	1530.33	590
595	XPS-4385W-D595G	195.95	1529.94	595
600	XPS-4385W-D600G	196.00	1529.55	600
605	XPS-4385W-D605G	196.05	1529.16	605
610	XPS-4385W-D610G	196.10	1528.77	610

Network Optical Equipment

Absolute Maximum Ratings					
Parameter	**Symbol**	**Min**	**Max**	**Units**	**Notes**
Storage Temperature	Tstg	-40	85	°C	
Operating Case Temperature	Topr	0	70	°C	
Relative Humidity	RH	0	85	%	Non condensing
Power Supply Voltage (5V)	Vcc5	-0.5	6.0	V	
Power Supply Voltage (3.3V)	$V_{CC}3$	-0.5	3.6	V	
Receiver Input Optical Power	Mip		4	dBm	Received average power

Recommended Operating Conditions					
Parameter	**Symbol**	**Min**	**Typ**	**Max**	**Units / Notes**
Power Supply Voltage (5V)	$V_{CC}5$	4.75	5	5.25	V
Power Supply Voltage (3.3V)	$V_{CC}3$	3.13	3.3	3.47	V
Power Supply Current (@5V)	$I_{CC}5$			500	mA / 1
Power Supply Current (@3.3V)	$I_{CC}3$			750	mA / 1
Power Dissipation	P_D			3.5	W
Operating Case Temperature	Topr	0		70	°C
Data Rate			8.5		Gb/s

1. Including in rush current. Maximum module current ramp rate is 100 mA/µs.

Transmitter Optical Specifications (Topr= 0 to 70°C, Vcc5=5V±5%, Vcc3 = 3.3V ±5%)						
Parameter	**Symbol**	**Min**	**Typ**	**Max**	**Units**	**Notes**
Average Launch Power	$Po_{, Avg}$	-1		3	dBm	2
Extinction Ratio	ER	8.2			dB	
Center Wavelength Spacing			50		GHz	
Transmitter Center Wavelength -- over life time	λc	X-60	X	X+60	pm	3
Output Spectrum Width	σ_λ			1	nm	-20 dB width
Side Mode Suppression Ratio	SMSR	30			dB	
Transmitter and Dispersion Penalty @ 800 ps/nm	TDP			3	dB	
Relative Intensity Noise	RIN			-130	dB/Hz	
Eye Mask	IEEE 802.3ae					
Average Launch Power of OFF Transmitter				-30	dBm	

2. Output power is power coupled into a 9/125 µm single-mode fiber.
3. X = specified ITU Grid wavelength. Wavelength stability is achieved within 60 seconds of power up.

Receiver Optical Specifications (Topr= 0 to 70°C, Vcc5=5V±5%,Vcc3 = 3.3V ±5%)						
Parameter	**Symbol**	**Min**	**Typ**	**Max**	**Units**	**Notes**
Sensitivity	Sen1			-24	dBm	4
Receiver Overload	P_{MAX}	-7	---		dBm	
LOS -- Deasserted	LOS_D	---	---	-30	dBm	Transition: low to high
LOS -- Asserted	LOS_A	-36	---	---	dBm	Transition: high to low
LOS -- Hysteresis		1	---		dB	
Wavelength of Operation	λc	1260		1620	nm	

4. Measured with worst ER; BER < 10^{-12} and PRBS 2^7-1.

Electrical Characteristics						
Parameter	**Symbol**	**Min**	**Typ**	**Max**	**Units**	**Notes**
High-Speed Signal (CML) Interface Specification						
Input Data Rate			8.5		Gb/s	
TX Clock Tolerance				±100	ppm	5
Differential Input Impedance	Rin		100		Ω	
Differential Data Input Amplitude		120		820	mVpp	6, Internally AC coupled
Output Data Rate			8.5		Gb/s	
RX Clock Tolerance				±100	ppm	5
Differential Output Impedance	Rout		100		Ω	
Differential Data Output Amplitude		340		850	mVpp	6, Internally AC coupled
Low-Speed Signal (LVTTL) Interface Specification						
Input High Voltage		2.0		Vcc	V	
Input Low Voltage		GND		0.8	V	
Output High Voltage		2.4		Vcc	V	
Output Low Voltage		GND		0.5	V	
Reference Clock (LVPECL) Interface Specification						
No reference clock						

5. Clock tolerance for 8.5 Gb/s, 4.25 Gb/s, 2.12 Gb/s.
6. The differential input and output amplitudes are per XFP MSA mask at points B' and C'.

Transceiver Timing Characteristics						
Parameter	**Symbol**	**Min**	**Typ**	**Max**	**Units**	**Notes**
TX_DIS Assert Time	t_off			10	µs	
TX_DIS Negate Time	t_on			2	ms	
Time to Initialize	t_init			300	ms	
Interrupt Assert Delay	interrupt_on			200	ms	
Interrupt Negate Delay	interrupt_off			500	µs	
P_Down/PST Assert Delay	P_Down/RST_on			100	µs	
P_Down Nagate Delay	P_Down/RST_off			300	ms	
Mod_NR Assert Delay	Mod_nr_on			1	ms	
Mod_NR Negate Delay	Mod_nr_off			1	ms	
Mod_Desel Assert Time	T_Mod_Desel			2	ms	
Mod_Desel De-Assert Time	T_Mod_Sel			2	ms	
P_Down Reset Time	T_reset	10			µs	
RX_LOS Assert Delay	T_Los_on			100	µs	
RX_LOS Negate Delay	T_Los_off			100	µs	
Serial ID Clock Rate	f_{SCL}	0		400	kHz	

MANAGEMENT INTERFACE

The structure of the memory map is shown in Figure 1, which is accessible over a 2-wire serial interface at the 8-bit address 1010000X (A0h). The normal 256 byte I2C address space is divided into low and upper blocks of 128 Bytes. The lower block of 128 Bytes is always directly available and is used for the diagnostics and control function. Multiple blocks of memories are available in the upper 128 Bytes of the address space. These are individually addressed through a table select Byte which the user enters into a location in the lower address space. Thus, there is a total available address space of 128*256 = 32 Kbytes in this upper memory space. The contents of Table 01h are listed in Table 1 below. Please refer SFF INF-8077i (Revision 4.5) for detailed information.

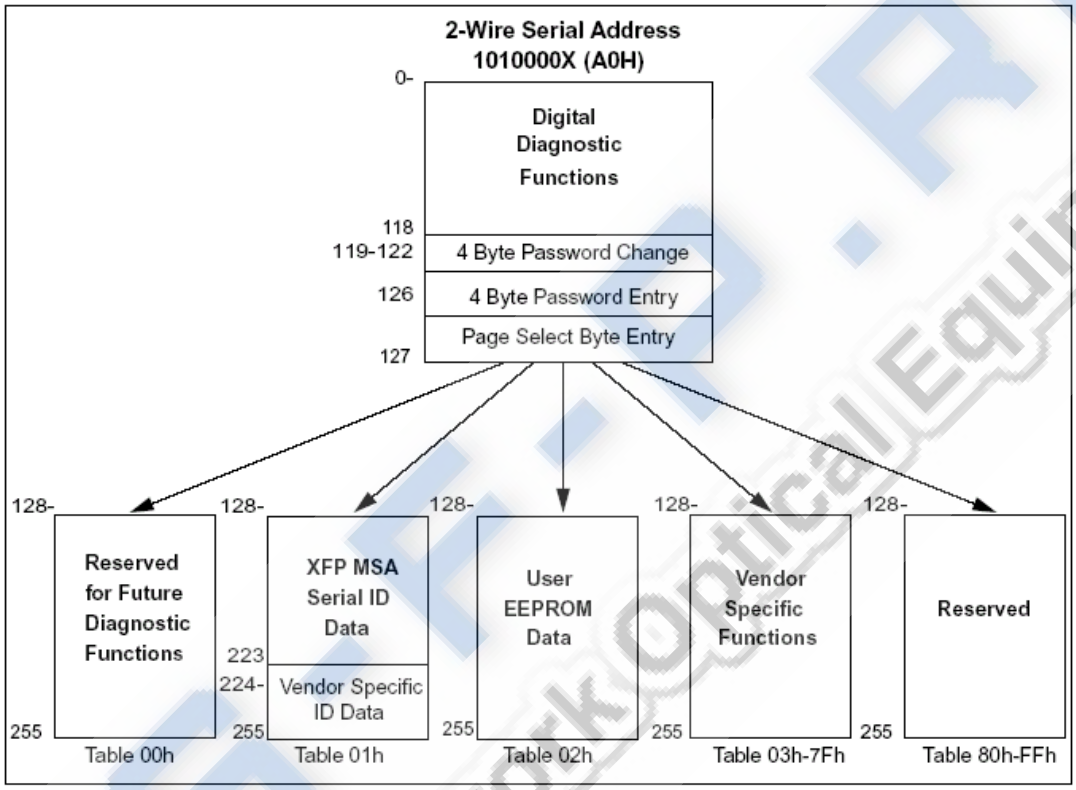

Figure 1. 2-wire Serial Digital Diagnostic Memory Map

Table 1 Monitoring Specification

Data Address	Parameter	Accuracy
96 ~ 97	Temperature	± 3°C
98 ~ 99	Reserved	
100 ~ 101	Tx Bias	± 10%
102 ~ 103	Tx Power	± 2dB
104 ~ 105	Rx Power	± 2dB
106 ~ 107	Vcc3	± 3%

CONNECTION DIAGRAM

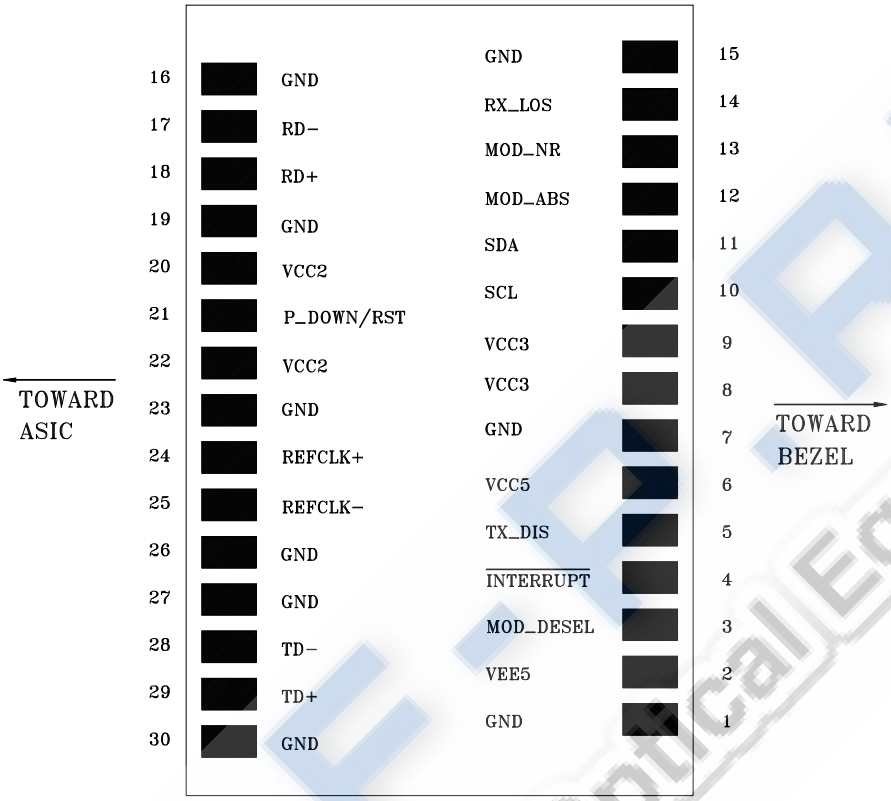

Table 2 PIN Description

PIN	Logic	Signal Name	Description	Note
1		GND	Module Ground	1
2		VEE5	-5.2V Power Supply **(Not required)**	3
3	LVTTL-I	Mod_Desel	Module De-select; When held low allows module to respond to 2-wire serial interface	
4	LVTTL-O	$\overline{\text{Interrupt}}$	$\overline{\text{Interrupt}}$; Indicates presence of an important condition which can be read over the 2wire serial interface	2
5	LVTTL-I	TX_DIS	Transmitter Disable; Turns off transmitter laser output	
6		VCC5	+5V Power Supply	3
7		GND	Module Ground	1
8		VCC3	+3.3V Power Supply	
9		VCC3	+3.3V Power Supply	
10	LVTTL-I/O	SCL	Serial 2-wire interface clock	2
11	LVTTL-I/O	SDA	Serial 2-wire interface data line	2
12	LVTTL-O	Mod_Abs	Indicates Module is not present. Grounded in the Module	2
13	LVTTL-O	Mod_NR	Module Not Ready; Indicating Module Operational Fault	2
14	LVTTL-O	RX_LOS	Receiver Loss Of Signal Indicator	2
15		GND	Module Ground	1
16		GND	Module Ground	1
17	CML-O	RD-	Receiver Inverted Data Output	
18	CML-O	RD+	Receiver Non-Inverted Data Output	
19		GND	Module Ground	1
20		VCC2	+1.8V Power Supply **(Not required)**	3

21	LVTTL-I	P_Down/RST	Power down; When high, requires the module to limit power consumption to 1.5W or below. 2-Wire serial interface must be functional in the low power mode.	
			Reset; The falling edge initiates a complete reset of the module including the 2-wire serial interface, equivalent to a power cycle.	
22		VCC2	+1.8V Power Supply **(Not required)**	3
23		GND	Module Ground	1
24	PECL-I	RefCLK+	Reference Clock Non-Inverted Input, AC coupled on the host board. **(Not used. Internally terminated to 50 ohm (100 ohm diff.))**	4
25	PECL-I	RefCLK-	Reference Clock Inverted Input, AC coupled on the host board. **(Not used. Internally terminated to 50 ohm (100 ohm diff.))**	4
26		GND	Module Ground	1
27		GND	Module Ground	1
28	CML-I	TD-	Transmitter Inverted Data Input	
29	CML-I	TD+	Transmitter Non-Inverted Data Input	
30		GND	Module Ground	1

1. Module ground pins GND are isolated from the module case and chassis ground within the module.
2. Shall be pulled up with 4.7K-10Kohms to a voltage between 3.15V and 3.45V on the host board.
3. These PINs are open within module.
4. A Reference Clock input is not required. If present, it will be ignored.

MECHANICAL SPECIFICATION (UNITS IN MM)

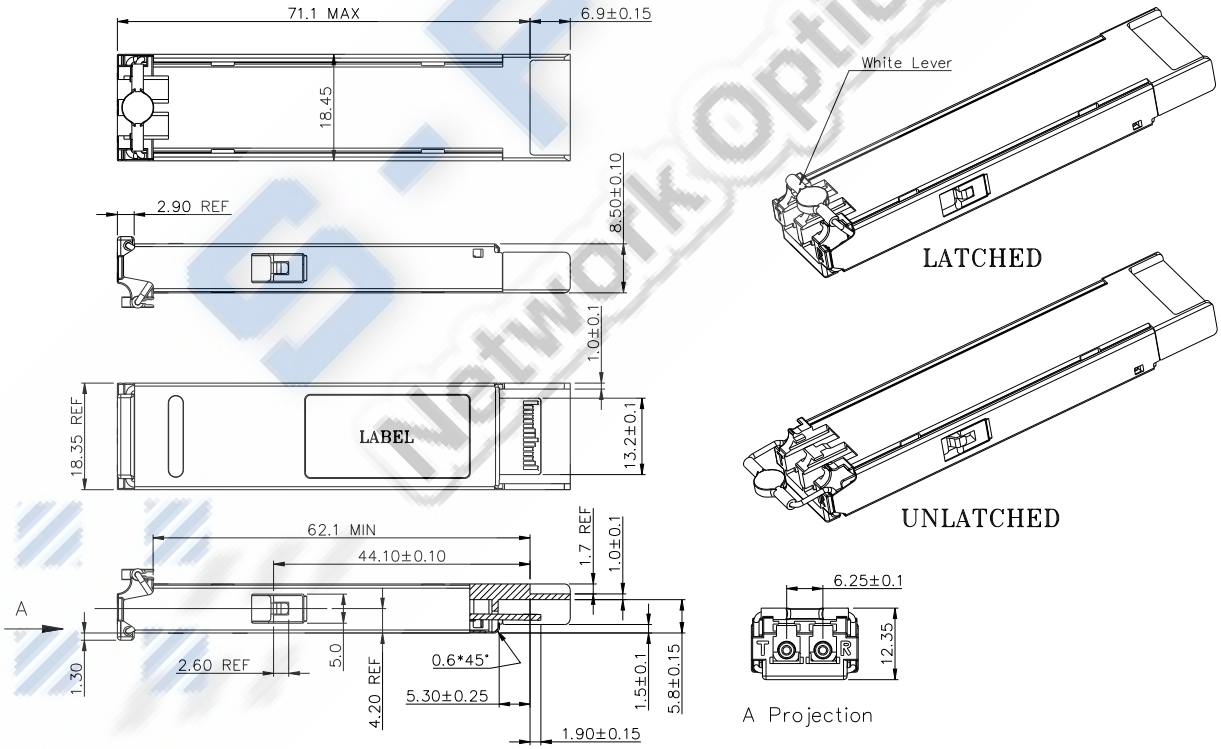

RECOMMENDED POWER CIRCUIT SCHEMATIC

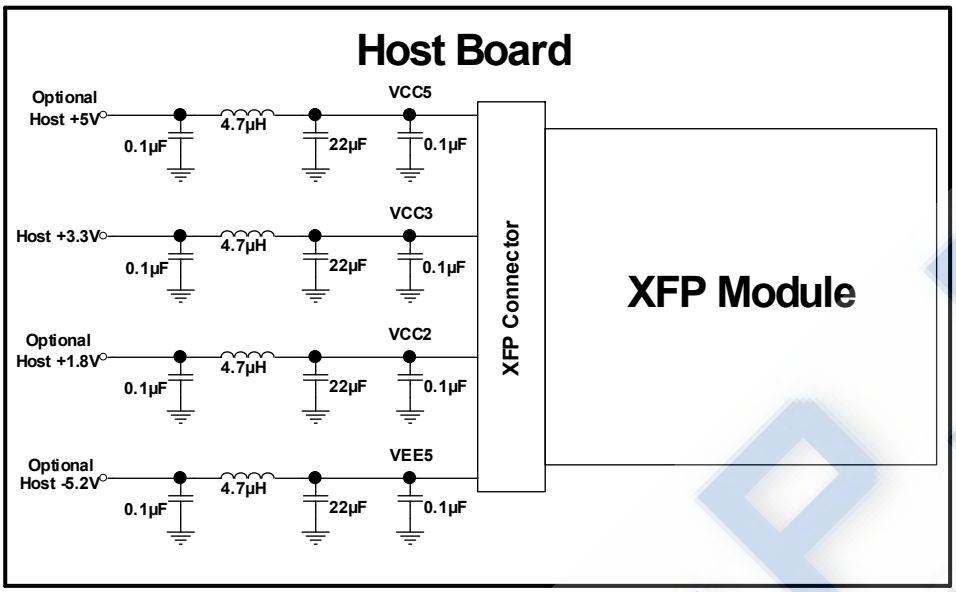

RECOMMENDED INTERFACE CIRCUIT

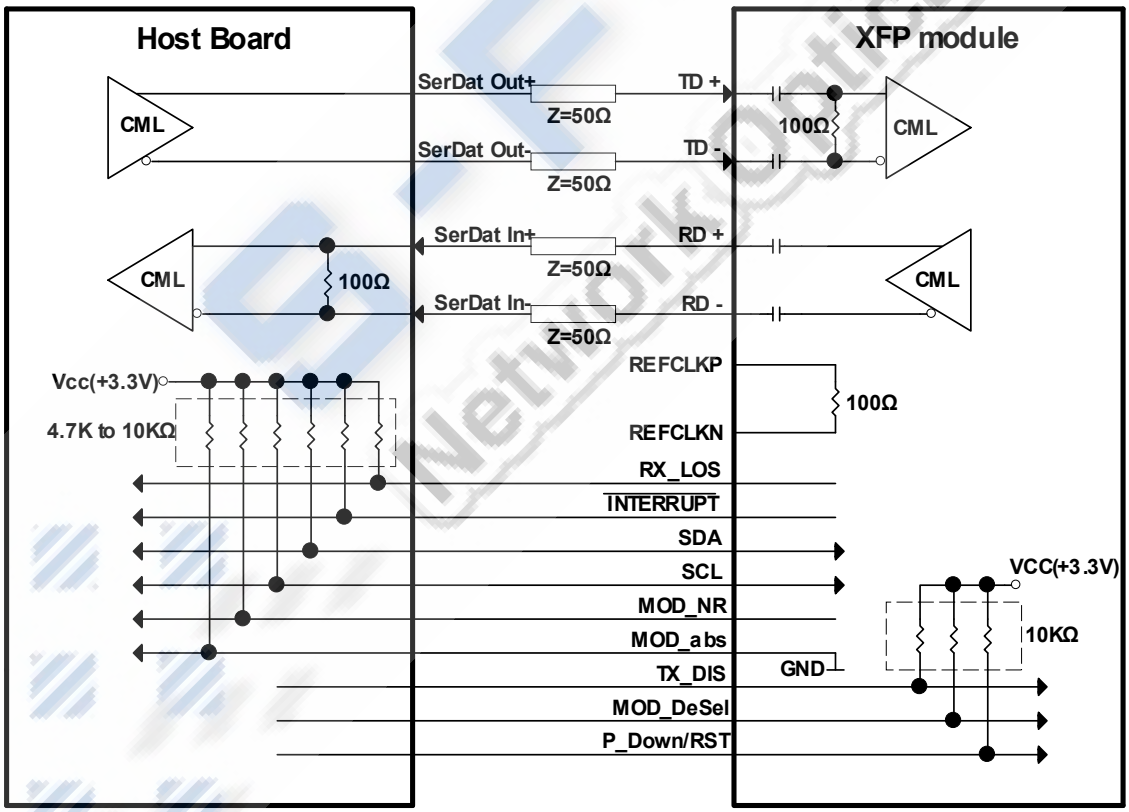

Table 2 Serial ID Memory Contents (Table 01h)

Address	Field Size (Byte)	Name of Filed	Description	Hex
128	1	Identifier	XFP	06
129	1	Ext. Identifier	power consumption < 3.5W, no Ref Clock required	90
130	1	Connector type	LC connector	07
131~138	8	Transceiver	800-SM-LL-V	00 00 00 00 00 00 00 00
139	1	Encoding	8B/10B, NRZ	50
140	1	BR-Min	1.063Gbps	0A
141	1	BR-Max	8.5Gbps	55
142	1	length (SMF)-Km	80 km	50
143	1	Length (E-50µm)	0 m	00
144	1	Length (50 µm)	0 m	00
145	1	Length (62.5 µm)	0 m	00
146	1	Length (Copper)	0 m	00
147	1	Device Tech	DWDM EML, APD detector	76
148~163	16	Vendor name	OPTOWAY	4F 50 54 4F 57 41 59 20 20 20 20 20 20 20 20 20
164	1	CDR Support	CDR supports 8.5G ~ 1.063G, XFI Loopback	01
165~167	3	Vendor OUI		00 0E FA
168~183	16	Vendor PN	XPS-4385W-DXXXG	58 50 53 2D 34 33 38 35 57 2D 44 3X 3X 3X 47 20
184~185	2	Vendor rev	ASCII (“31 61” means 1a revision)	xx xx
186~187	2	Wavelength	1XXX.XXnm	xx xx
188~189	2	Wavelength Tolerance	+/- 0.06nm	00 0C
190	1	Max Case Temp	70deg	46
191	1	CC_BASE	Check sum of Byte 128 -- 190	
192~195	4	Power Supply	3.5 Wmax, 1.5W pd_max , 750mA 3.3V, 500 mA 5V	AF 96 A8 00
196~211	16	Vendor SN	ASCII	xx xx xx xx xx xx xx xx xx xx xx xx xx xx xx xx
212~219	8	Date code	ASCII Year (2 Byte), Month (2 Byte), Day (2 Byte)	xx xx xx xx xx xx 20 20
220	1	Diagnostic Monitoring Type	No BER Support, Average Power	08
221	1	Enhanced Options	Optional Soft TX_DISABLE implemented, Optional Soft P_down implemented	60
222	1	Aux Monitoring	AUX1 for Vcc3, AUX2 for Vcc5.	76
223	1	CC_EXT	Check sum of Byte 192 -- 222	
224~255	32	Vendor Specific		Reserved

Note: Specifications subject to change without notice.

REVISION HISTORY

Version	Subject	Release Date
1.0	Initial datasheet	2010/7/1
2.0	Change the TX wavelength stability +/- 60pm	2012/9/1
3.0	Add 50GHz ITU Grid Channel # 190, 195, 605 and 610	2016/1/5
4.0	Revise package diagram	2017/10/12

S·F·P·R·D Network Optical Equipment