SPTSLP4SLCDF-PRO

Intel® SPTSLP4SLCDF Compatible TAA Compliant 100GBase-LR QSFP28 Single Lambda Transceiver (SMF, 1310nm, 10km w/host FEC, 0 to 70C, LC)

Features

- SFF-8665 Compliance
- Duplex LC Connector
- Commercial Temperature 0 to 70 Celsius
- Single-mode Fiber
- Hot Pluggable
- Excellent ESD Protection
- Metal with Lower EMI
- RoHS Compliant and Lead Free

Applications:

- 100GBase-LR Ethernet
- Access and Enterprise

Product Description

This Intel® SPTSLP4SLCDF compatible QSFP28 transceiver provides 100GBase-LR throughput up to 10km over single-mode fiber (SMF) using a wavelength of 1310nm via an LC connector. It is guaranteed to be 100% compatible with the equivalent Intel® transceiver. This easy to install, hot swappable transceiver has been programmed, uniquely serialized and data-traffic and application tested to ensure that it will initialize and perform identically. Digital optical monitoring (DOM) support is also present to allow access to real-time operating parameters. This transceiver is Trade Agreements Act (TAA) compliant. We stand behind the quality of our products and proudly offer a limited lifetime warranty.

Proline's transceivers are RoHS compliant and lead-free.

TAA refers to the Trade Agreements Act (19 U.S.C. & 2501-2581), which is intended to foster fair and open international trade. TAA requires that the U.S. Government may acquire only "U.S. – made or designated country end products.

Rev. 030524

Absolute Maximum Ratings

Parameter	Symbol	Min.	Typ.	Max.	Unit
Maximum Supply Voltage	Vcc	-0.5		3.6	V
Storage Temperature	Ts	-40		85	°C
Operating Case Temperature	Top	0		70	°C
Operating Humidity (non-condensing)	RH	5		85	%
Damage Threshold	THd	5.5			dBm

Recommended Operating Conditions and Power Supply Requirements

Parameter	Symbol	Min.	Typ.	Max.	Unit	Notes
Operating Case Temperature	TOP	0		70	degC	
Power Supply Voltage	VCC	3.135	3.3	3.465	V	
Electrical Data Rate, each Lane (NRZ)			25.78125		Gb/s	
Optical Data Rate (PAM4)			53.125		GBd	
Data Rate Accuracy		-100		100	ppm	
Pre-FEC Bit Error Ratio				$2.4x10^{-4}$		
Post-FEC Bit Error Ratio				$1x10^{-12}$		1
Control Input Voltage High		2		Vcc	V	
Control Input Voltage Low		0		0.8	V	
Link Distance with G.652	D	0.002		10	km	2

Notes:

1. FEC feature is embedded in the module.
2. FEC required to be turned on to support maximum transmission distance.

Electrical Characteristics

Parameter	Test Point	Min.	Typ.	Max.	Unit	Notes
Power Consumption				4.0	W	
Supply Current	Icc			1.36	A	
Transmitter (each Lane)						
Overload Differential Voltagepk-pk	TP1a	900			mV	
Common Mode Voltage(Vcm)	TP1	-350		2850	mV	1
Differential TerminationResistance Mismatch	TP1			10	%	At 1MHz
Differential Return Loss(SDD11)	TP1			See CEI-28G-VSR Equation 13-19	dB	
Common Mode to Differential Conversion andDifferential to Common Mode Conversion (SDC11, SCD11)	TP1			See CEI-28G-VSR Equation 13-20	dB	
Stressed Input Test	TP1a	See CEI-28G-VSR Section 13.3.11.2.1				
Receiver (each Lane)						
Differential Voltage, pk-pk	TP4			900	mV	
Common Mode Voltage(Vcm)	TP4	-350		2850	mV	1
Common Mode Noise, RMS	TP4			17.5	mV	
Differential Termination Resistance Mismatch	TP4			10	%	At 1MHz
Differential Return Loss(SDD22)	TP4			See CEI-28G-VSR Equation 13-19	dB	
Common Mode to Differential Conversion andDifferential to Common Mode Conversion (SDC22, SCD22)	TP4			See CEI-28G-VSR Equation13-21	dB	
Common Mode Return Loss(SCC22)	TP4			-2	dB	2
Transition Time, 20 to 80%	TP4	9.5			ps	
Vertical Eye Closure (VEC)	TP4			5.5	dB	
Eye Width at 10^{-15} probability(EW15)	TP4	0.57			UI	
Eye Height at 10^{-15} probability (EH15)	TP4	228			mV	

Notes:

1. Vcm is generated by the host. Specification includes effects of ground offset voltage.
2. From 250MHz to 30GHz.

Optical Characteristics

Parameter		Symbol	Min.	Typ.	Max.	Unit	Notes
Transmitter							
Center Wavelength		λt	1304.5		1317.5	nm	
Side Mode Suppression Ratio		SMSR	30			dB	
Average Launch Power		PAVG	-1.4		4.5	dBm	1
Outer Optical Modulation Amplitude (OMA_{outer})		POMA	0.7		4.7	dBm	2
Launch Power in OMA_{outer} minus TDECQ	**for ER ≥ 4.5dB**		-0.7			dBm	
	for ER < 4.5dB		-0.6			dBm	
Transmitter and Dispersion Eye Closure for PAM4		TDECQ			3.4	dB	
TDECQ – 10*$\log_{10}$(Ceq)					3.4	dB	3
Extinction Ratio		ER	3.5			dB	
$RIN_{15.6}$ OMA		RIN			-136	dB/Hz	
Optical Return Loss Tolerance		TOL			15.6	dB	
Transmitter Reflectance		RT			-26	dB	
Transmitter Transition Time					17	ps	
Average Launch Power of OFF Transmitter		Poff			-15	dBm	
Receiver							
Center Wavelength		λr	1304.5		1317.5	nm	
Damage Threshold		THd	5.5			dBm	4
Average Receive Power			-7.7		4.5	dBm	5
Receive Power (OMA_{outer})					4.7	dBm	
Receiver Sensitivity (OMA_{outer})		SEN			Equation (1)	dBm	6
Stressed Receiver Sensitivity (OMA_{outer})		SRS			-4.1	dBm	7
Receiver Reflectance		RR			-26	dB	
LOS Assert		LOSA	-15			dBm	
LOS Deassert		LOSD			-10.7	dBm	
LOS Hysteresis		LOSH	0.5			dB	
Conditions of stressed receiver sensitivity test							
Stressed Eye Closure for PAM4 (SECQ)				3.4		dB	
SECQ – 10*$\log_{10}$(Ceq)					3.4	dB	

Notes:

1. Average launch power, each lane min is informative and not the principal indicator of signal strength. A transmitter with launch power below this value cannot be compliant; however, a value above this does not ensure compliance.
2. Even if the TDECQ < 1.4dB for an extinction ratio of ≥ 4.5dB or TDECQ < 1.3dB for an extinction ratio of < 4.5dB, the OMA_{outer} (min) must exceed the minimum value specified here.

3. Ceq is a coefficient defined in IEEE Std 802.3-2018 clause 121.8.5.3 which accounts for reference equalizer noise enhancement.
4. Average receive power (min) is informative and not the principal indicator of signal strength. A received power below this value cannot be compliant; however, a value above this does not ensure compliance.
5. The receiver shall be able to tolerate, without damage, continuous exposure to a modulated optical input signal having this power level on one lane. The receiver does not have to operate correctly at this input power.
6. Receiver sensitivity (OMA_{outer}) (max) is informative and is defined for a transmitter with a value of SECQ up to 3.4 dB. It should meet Equation (1), which is illustrated in the figure in note 8.

$$RRRR = \max(-6.1, RRSSSSSS - 7.5)\ dddddd \qquad (1)$$

Where:

RS is the receiver sensitivity, and

SECQ is the SECQ of the transmitter used to measure the receiver sensitivity.

7. Measured with conformance test signal at TP3 for the BER equal to 2.4×10^{-4}.
8. These test conditions are for measuring stressed receiver sensitivity. They are not characteristics of the receiver.

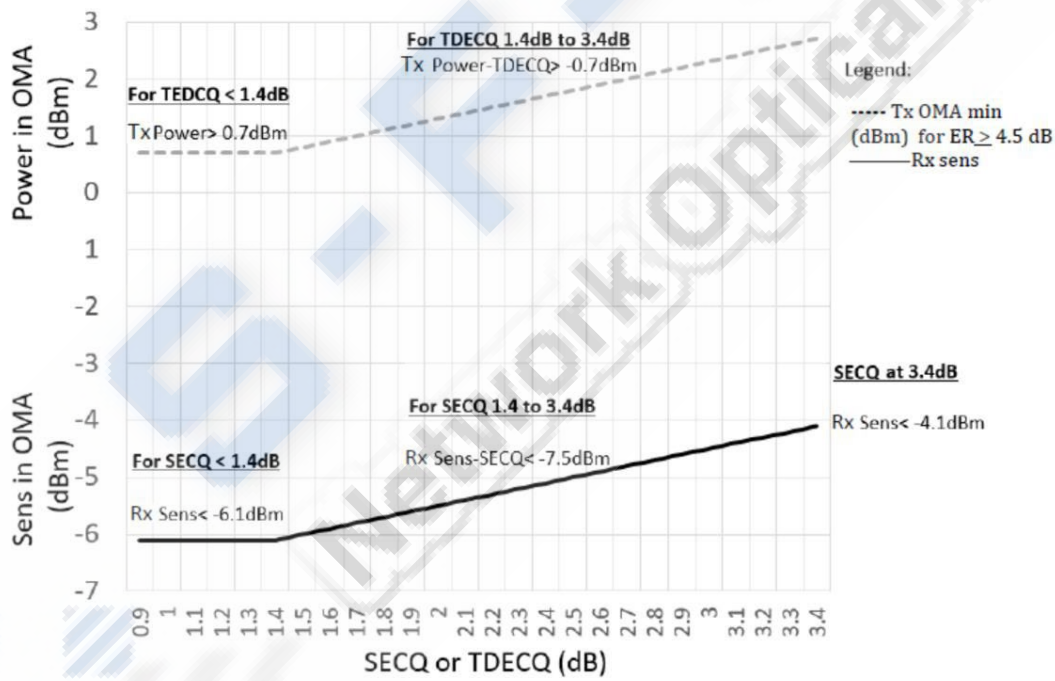

Pin Descriptions

Pin	Logic	Symbol	Name/Descriptions	Ref.
1		GND	Module Ground	1
2	CML-I	Tx2-	Transmitter inverted data input	
3	CML-I	Tx2+	Transmitter non-inverted data input	
4		GND	Module Ground	1
5	CML-I	Tx4-	Transmitter inverted data input	
6	CML-I	Tx4+	Transmitter non-inverted data input	
7		GND	Module Ground	1
8	LVTTL-I	MODSEIL	Module Select	2
9	LVTTL-I	ResetL	Module Reset	2
10		VCCRx	+3.3v Receiver Power Supply	
11	LVCMOS-I	SCL	2-wire Serial interface clock	2
12	LVCMOS-I/O	SDA	2-wire Serial interface data	2
13		GND	Module Ground	1
14	CML-O	RX3+	Receiver non-inverted data output	
15	CML-O	RX3-	Receiver inverted data output	
16		GND	Module Ground	1
17	CML-O	RX1+	Receiver non-inverted data output	
18	CML-O	RX1-	Receiver inverted data output	
19		GND	Module Ground	1
20		GND	Module Ground	1
21	CML-O	RX2-	Receiver inverted data output	
22	CML-O	RX2+	Receiver non-inverted data output	
23		GND	Module Ground	1
24	CML-O	RX4-	Receiver inverted data output	
25	CML-O	RX4+	Receiver non-inverted data output	
26		GND	Module Ground	1
27	LVTTL-O	ModPrsL	Module Present, internal pulled down to GND	
28	LVTTL-O	IntL	Interrupt output, should be pulled up on host board	2
29		VCCTx	+3.3v Transmitter Power Supply	
30		VCC1	+3.3v Power Supply	
31	LVTTL-I	LPMode	Low Power Mode	2
32		GND	Module Ground	1
33	CML-I	Tx3+	Transmitter non-inverted data input	
34	CML-I	Tx3-	Transmitter inverted data input	
35		GND	Module Ground	1
36	CML-I	Tx1+	Transmitter non-inverted data input	
37	CML-I	Tx1-	Transmitter inverted data input	
38		GND	Module Ground	1

NetworkOpticalEquipment

Notes:

1. Module circuit ground is isolated from module chassis ground with in the module.
2. Open collector; should be pulled up with 4.7k-10k ohms on host board to a voltage between 3.15V and 3.6V.

Electrical Pin-out Details

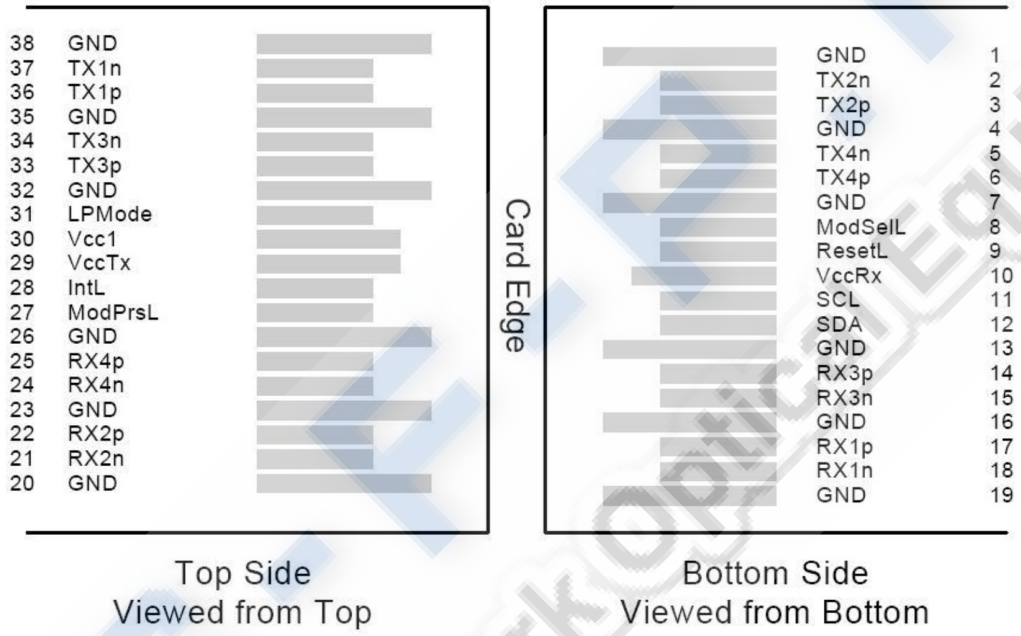

Transceiver Block Diagram

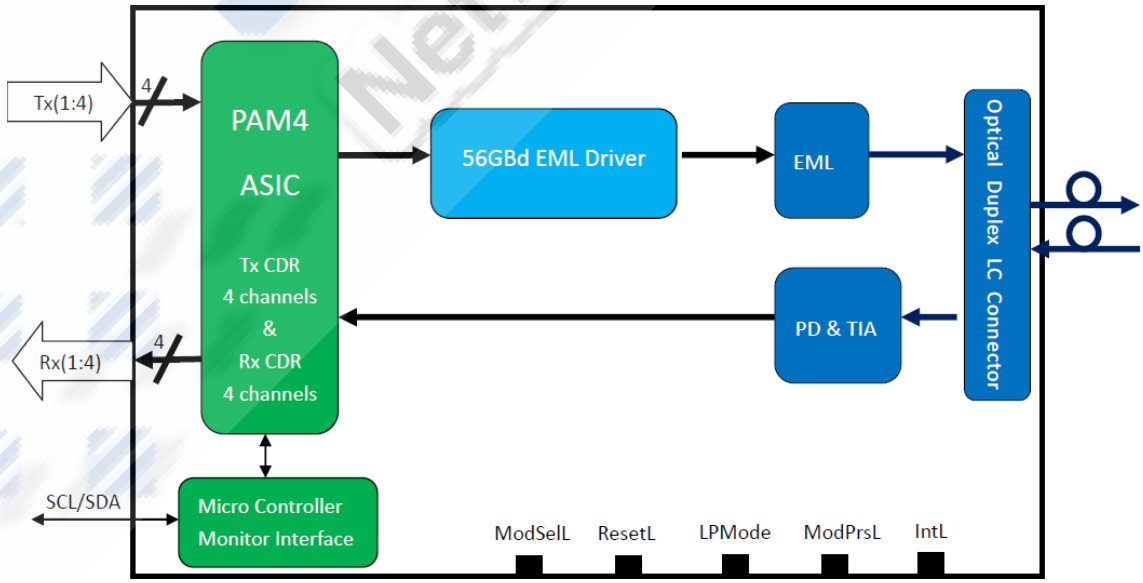

Recommended Power Supply Filter

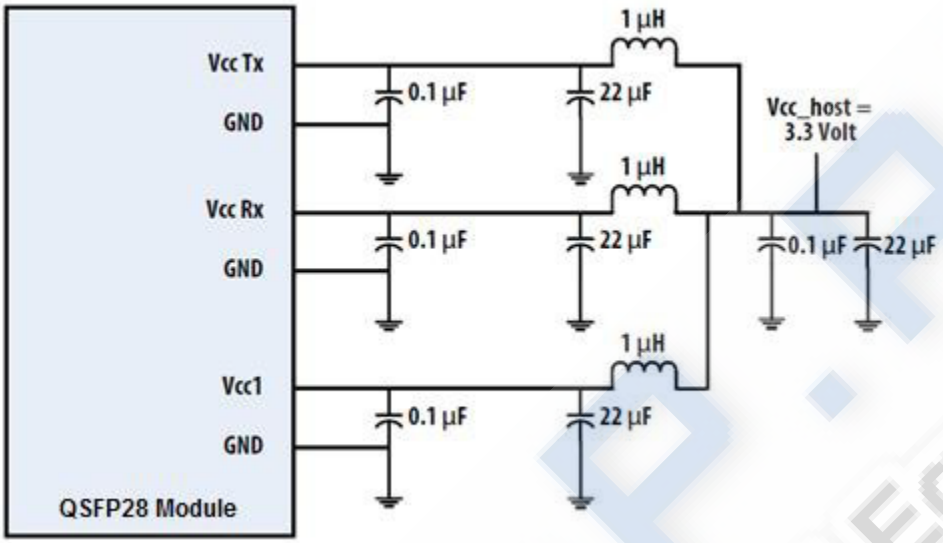

Mechanical Specifications

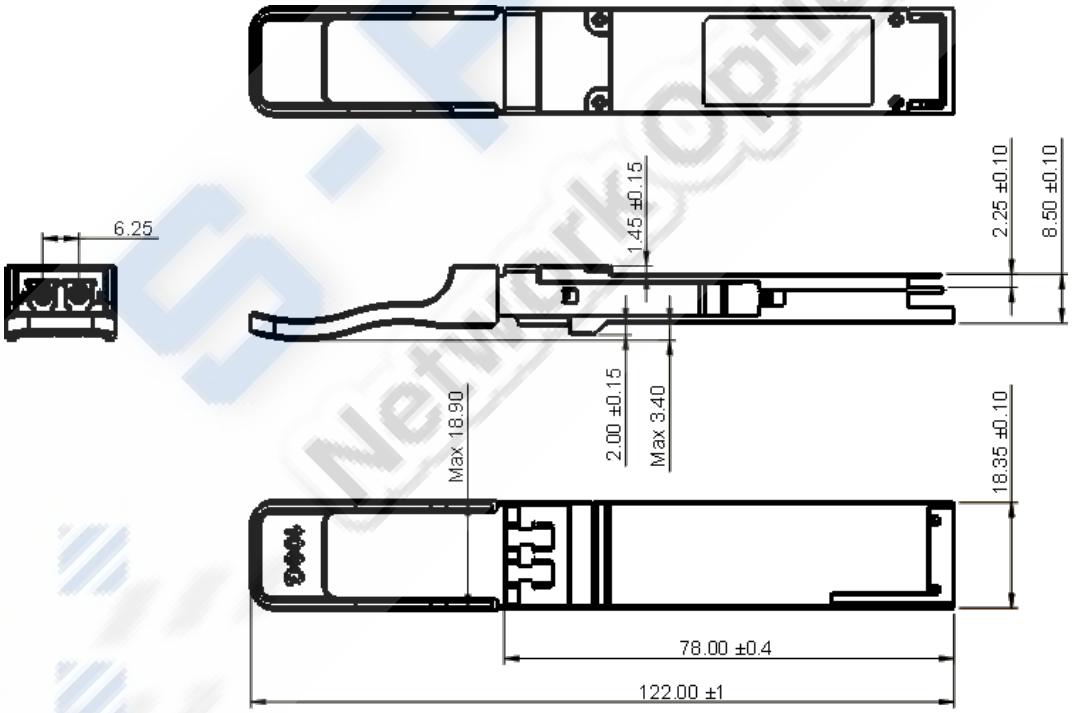

About Us:

Proline Options is one of North America's leading providers of transceivers and high speed cabling. With a reputation for quality, tested products that cover the connectivity spectrum, Proline Options has a solution for you regardless of the specification.

At Proline Options, every product is tested in its intended application - never batch or spec tested only. We run bandwidth, distance and IOS network tests. We have documented an impressive 0.03% failure rate over the last 10 years. To continue this rate of success we invest millions annually in our own on-site testing lab.

Tel: 855.933.3223
Email: sales@prolineoptions.com
Email: techsupport@prolineoptions.com
Web: https://www.prolineoptions.com

S·F·P·A
Network Optical Equipment