# SPM-2500FWG (RoHS Compliant)

## 32G FC / 100m / 850nm Digital Diagnostic SFP28 LC Multi-mode TRANSCEIVER

## FEATURES

- Up to 28.05 Gb/s Bi-directional Data Links
- Complaint with SFF-8402 SFP28 MSA
- Compliant with Fibre Channel 3200-SN
- Compliant with 16G and 8G Fibre Channel
- Support OTN 27.85Gbps
- Support 25G Ethernet
- Built-in dual CDR
- Link Distance at 28.05 Gb/s
  100m links with OM4 MMF Cables
  70m links with OM3 MMF Cables
  20m links with OM2 MMF Cables
- SFF-8472 Digital Diagnostic Function
- AC/AC Coupling according to MSA
- Single +3.3 V Power Supply
- RoHS Compliant
- 0 to 70ºC Operating
- Class 1 Laser International Safety Standard IEC-60825 Compliant
- Enhanced EWRAP, OWRAP, and CDR bypass operational features

## APPLICATIONS

- Multi-rate 32x / 16x / 8x Fibre Channel
- OTN OTU4
- 25G Ethernet

## DESCRIPTION

The SPM-2500FWG series multi-mode transceiver is a small form factor pluggable module for bi-directional serial optical data communications such as 32x/16x/8x Fibre Channel, OTN OTU4, and 25G Ethernet. It is with the SFP+ 20-pin connector to allow hot plug capability. Digital diagnostic functions are available via an $I^2C$. This module is designed for multi- mode fiber and operates at a nominal wavelength of 850 nm. The transmitter section uses a Vertical Cavity Surface Emitted Laser (VCSEL) and is a class 1 laser compliant according to International Safety Standard IEC-60825. The receiver section uses an integrated GaAs detector preamplifier (IDP) mounted in an optical header and a rate selection clock data recovery (CDR) IC.

## LASER SAFETY

This multi-mode transceiver is a Class 1 laser product. It complies with IEC-60825 and FDA 21 CFR 1040.10 and 1040.11. The transceiver must be operated within the specified temperature and voltage limits. The optical ports of the module shall be terminated with an optical connector or with a dust plug.

## ORDER INFORMATION

| P/No. | Bit Rate (Gb/s) | FC | Distance (m) | Wavelength (nm) | Package | Case Temp (ºC) | RoHS Compliant |
|---|---|---|---|---|---|---|---|
| SPM-2500FWG | Up to 28.05 | 32G/16G/8G | 20/70/100* | 850 VCSEL | SFP28 with DMI | 0 to 70 | Yes |

*: 20m for OM2 MMF, 70m for OM3 MMF, and 100m for OM4 MMF. All tested at 28.05Gb/s.

**Absolute Maximum Ratings**

| Parameter | Symbol | Min | Max | Units | Notes |
|---|---|---|---|---|---|
| Storage Temperature | Tstg | -40 | 85 | ºC | |
| Relative Humidity | RH | 0 | 85 | % | Non-condensing |
| Operating Case Temperature | Topr | 0 | 70 | ºC | |
| Power Supply Voltage | Vcc | -0.5 | 3.6 | V | |
| Receiver Input Optical Power | Mip | | 3 | dBm | Average power |

**Recommended Operating Conditions**

| Parameter | Symbol | Min | Typ | Max | Units / Notes |
|---|---|---|---|---|---|
| Power Supply Voltage | Vcc | 3.135 | 3.3 | 3.465 | V |
| Operating Case Temperature | Topr | 0 | | 70 | ºC |
| Relative Humidity | RH | 0 | | 85 | % / Non-condensing |
| Power Supply Current | $I_{CC\ (TX+RX)}$ | | 200 | 290 | mA |
| Data Rate | | | 25.78 | | Gb/s |

OPTOWAY TECHNOLOGY INC. No.38, Kuang Fu S. Road, Hu Kou, Hsin Chu Industrial Park, Hsin Chu, Taiwan 303
Tel: 886-3-5979798 Fax: 886-3-5979737
E-mail: sales@optoway.com http: // www.optoway.com 

| Transmitter Optical Specifications (0ºC < Topr < 70ºC, 3.13V < Vcc < 3.47V) | | | | | | |
|---|---|---|---|---|---|---|
| **Parameter** | **Symbol** | **Min** | **Typ** | **Max** | **Units** | **Notes** |
| Average Launch Power | $P_{o,AVG}$ | -6.2 | | 2 | dBm | 1 |
| Optical Modulation Amplitude | $P_{o,OMA}$ | -3.2 | | | dBm | |
| Output Center Wavelength | $\lambda_c$ | 840 | | 860 | nm | |
| Output Spectrum Width | $\sigma_\lambda$ | | | 0.57 | nm | RMS(σ) |
| Extinction Ratio | ER | 2 | | | | |
| Relative Intensity Noise | RIN | | | -129 | dB/Hz | |

1. Output power is power coupled into a 50/125 μm multi-mode fiber.

| Receiver Optical Specifications (0ºC < Topr < 70ºC, 3.13V < Vcc < 3.47V) | | | | | | |
|---|---|---|---|---|---|---|
| **Parameter** | **Symbol** | **Min** | **Typ** | **Max** | **Units** | **Notes** |
| Average Receiver Power | Sens1 | | | 2 | dBm | 2 |
| Unstressed Sensitivity (OMA) | Sens2 | -10.2 | --- | | dBm | |
| Wavelength of Operation | $\lambda_c$ | 820 | | 860 | nm | |
| LOS – Deasserted | $LOS_D$ | --- | --- | -13 | dBm | Transition: low to high |
| LOS – Asserted | $LOS_A$ | -30 | --- | --- | dBm | Transition: high to low |
| Receiver Reflectance | ORL | 12 | | | dB | |

2. Measured with worst ER; BER < $1x10^{-6}$ and PRBS $2^{31}$-1.

| Electrical Characteristics | | | | | | |
|---|---|---|---|---|---|---|
| **Parameter** | **Symbol** | **Min** | **Typ** | **Max** | **Units** | **Notes** |
| **High-Speed Signal (CML) Interface Specification** | | | | | | |
| Input Data Rate | | 8.5 | | 28.05 | Gb/s | |
| TX Clock Tolerance | | -100 | | +100 | ppm | 3 |
| Differential Input Impedance | Rin | | 100 | | Ω | |
| Differential Data Input Amplitude | | 150 | | 1200 | mVpp | Internally AC coupled |
| Output Data Rate | | 8.5 | | 28.05 | Gb/s | |
| RX Clock Tolerance | | -100 | | +100 | ppm | 3 |
| Differential Output Impedance | Rout | | 100 | | Ω | |
| Differential Data Output Amplitude | | 350 | 600 | 700 | mVpp | Internally AC coupled |
| **Low-Speed Signal (LVTTL) Interface Specification** | | | | | | |
| Input High Voltage | | 2.0 | | Vcc+0.3 | V | |
| Input Low Voltage | | GND | | 0.8 | V | |
| Output High Voltage | | 2.4 | | Vcc | V | |
| Output Low Voltage | | GND | | 0.5 | V | |

3. Clock tolerance for 28.05Gb/s.

## CONNECTION DIAGRAM

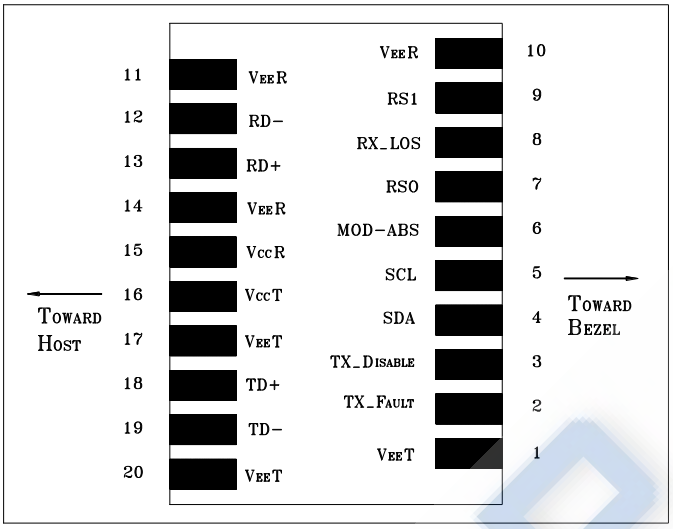


| PIN | Signal Name | Description | PIN | Signal Name | Description |
|---|---|---|---|---|---|
| 1 | $V_{EE}T$ | Transmitter Signal Ground | 11 | $V_{EE}R$ | Receiver Signal Ground |
| 2 | TX_Fault | Transmitter Fault Indication. Logic "1" Output = Laser Fault. Logic "0" Output = Normal Operation | 12 | RD- | Inverse Receiver Data Out |
| 3 | TX_Disable | Logic "1" Input (or no connection) = Laser off, Logic "0" = Laser on. | 13 | RD+ | Receiver Data Out |
| 4 | SDA | Modulation Definition 2 – Two wires serial ID Interface | 14 | $V_{EE}R$ | Receiver Signal Ground |
| 5 | SCL | Modulation Definition 1 – Two wires serial ID Interface | 15 | $V_{CC}R$ | Receiver Power – 3.3V±5% |
| 6 | MOD-ABS | Modulation Definition 0 – Ground in Module | 16 | $V_{CC}T$ | Transmitter Power – 3.3V±5% |
| 7 | RS0 | RX Rate Select: (See Rate Select Control) Open or Low: enable CDR for 16G or 8G FC. High: enable CDR for 32G FC or 25GE. | 17 | $V_{EE}T$ | Transmitter Signal Ground |
| 8 | RX_LOS | Loss of Signal Out (OC). | 18 | TD+ | Transmitter Data In |
| 9 | RS1 | TX Rate Select: (See Rate Select Control) Open or Low: enable CDR for 16G or 8G FC. High: enable CDR for 32G FC or 25GE. | 19 | TD- | Inverse Transmitter Data In |
| 10 | $V_{EE}R$ | Receiver Signal Ground | 20 | $V_{EE}T$ | Transmitter Signal Ground |

## MODULE DEFINITION

| Module Definition | PIN 4 | PIN 5 | PIN 6 | Interpretation by Host |
|---|---|---|---|---|
| 4 | SDA | SCL | MOD-ABS | Serial module definition protocol |

Module Definition 4 specifies a serial definition protocol. For this definition, upon power up, SDA and SCL appear as no connector (NC) and MOD-ABS is TTL LOW. When the host system detects this condition, it activates the serial protocol. The protocol uses the 2-wire serial CMOS $E^2$PROM protocol of the ATMEL AT24C01A/02/04 family of components.

## RECOMMENDED CIRCUIT SCHEMATIC

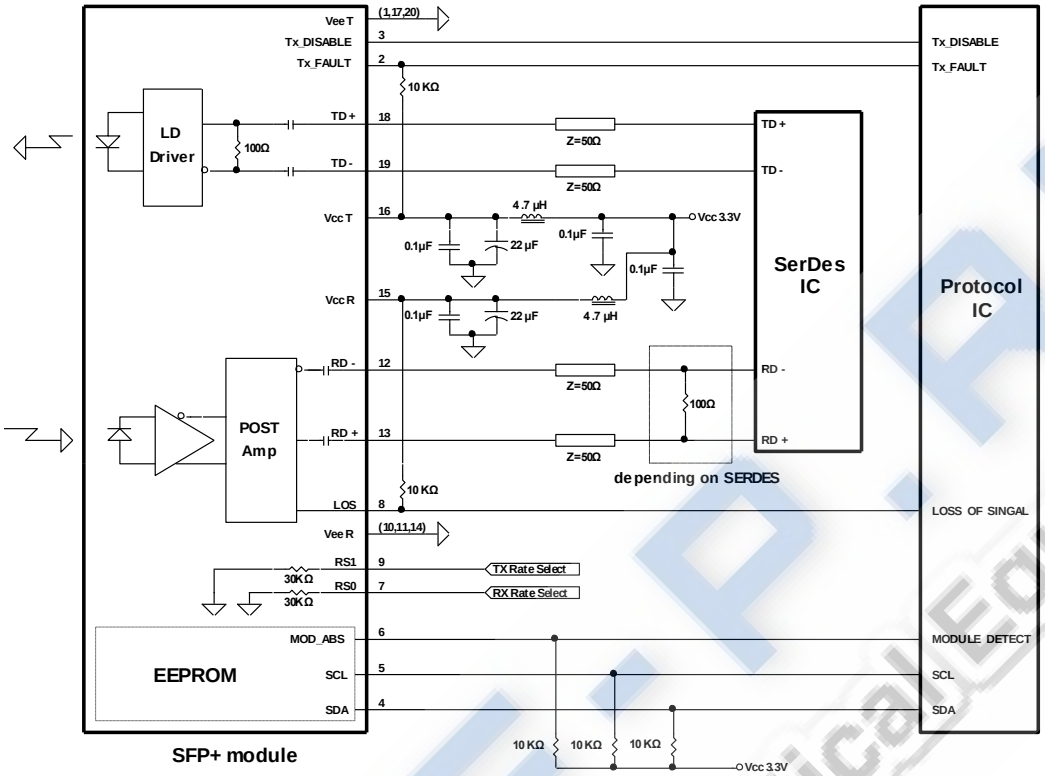


## PACKAGE DIAGRAM

**Units in mm**

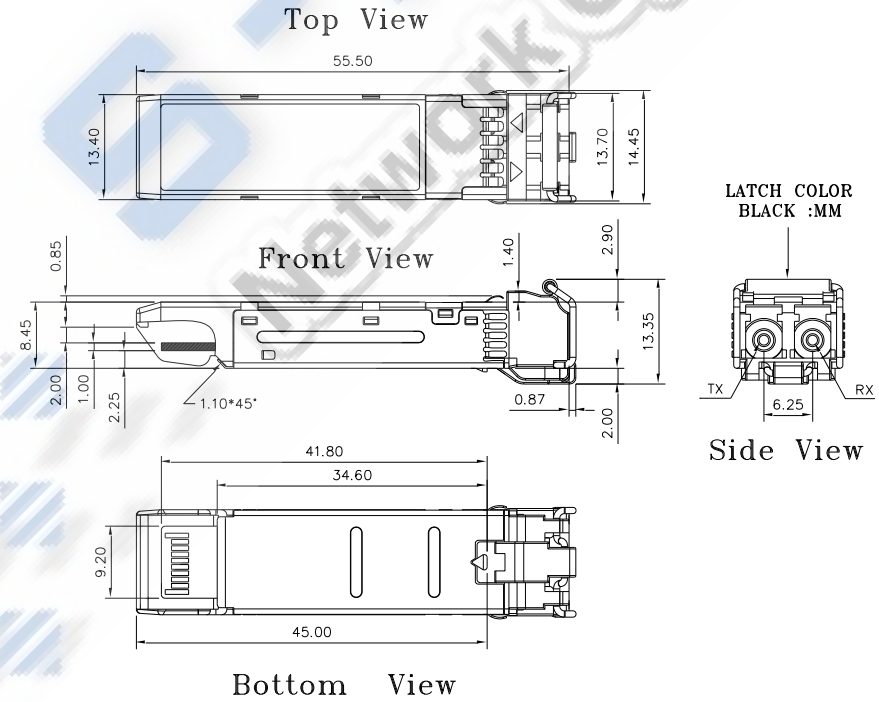


**Note:** Specifications subject to change without notice.

## WRAP AND BYPASS CDR OPERATION FUNCTIONS - SOFT CONTROL (Address A2h, Byte 111).

To assist with local host or remote diagnostic and optimization sequences, electrical and optical wrap functions can be enabled. Optical wrap (OWRAP) takes the received optical signal through CDRs and retransmits it optically out. Electrical wrap (EWRAP) takes the received electrical signal through CDRs and retransmits it electrically out. Optional forward functions can be transmitted outbound the wrapped information via i2c control.

| Byte | Bit | Name | Description |
|---|---|---|---|
| 111 | 7 | TX CDR Bypass | When set, bypass the TX CDR. |
| | 6 | RX CDR Bypass | When set, bypass the RX CDR. |
| | 4-5 | Reserved | Reserved. |
| | 3 | OWRAP Forward Enable Bit | When set in combination with OWRAP Enable, OWRAP Forward routes incoming SFP+ Rx optical data to both the Tx optical output and the Rx electrical output. Enabling sets bit 2 and clears all other bits in byte 111. |
| | 2 | OWRAP Enable Bit | When set, OWRAP routes incoming SFP+ Rx optical data to the Tx optical output. Enabling clears all other bits in byte 111. |
| | 1 | EWRAP Forward Enable Bit | When set in combination with EWRAP Enable, EWRAP Forward routes incoming SFP+ Tx electrical data to both Rx electrical output and Tx optical output. Enabling sets bit 0 and clears all other bits in byte 111. |
| | 0 | EWRAP Enable Bit | When set, EWRAP Enable routes incoming SFP+ Tx electrical data to the Rx electrical output. Enabling clears all other bits in byte 111. |

## OWRAP FORWARD ENABLE MODE (I2C CONTROLLED)

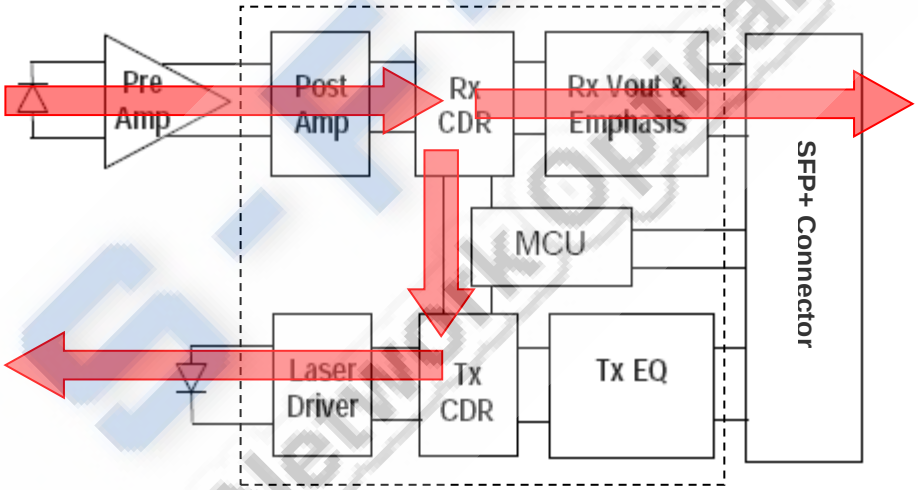


## OWRAP ENABLE MODE (I2C CONTROLLED)

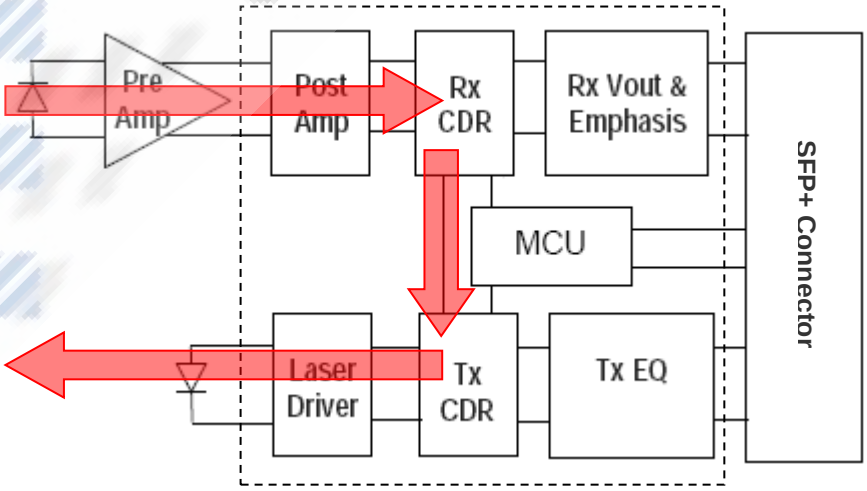

## EWRAP FORWARD ENABLE MODE (I2C CONTROLLED)

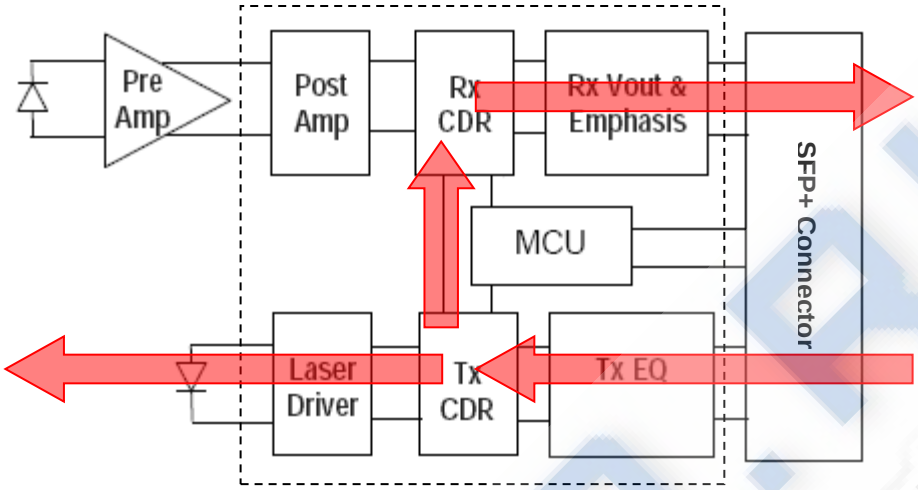


## EWRAP ENABLE MODE (I2C CONTROLLED)

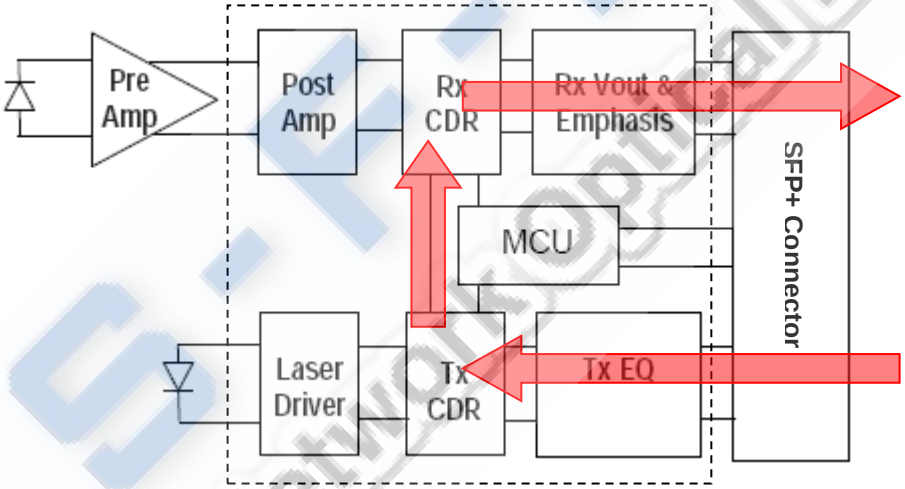


## RATE SELECT CONTROL

RX / TX rate can be independently controlled by RS0 / RS1 input pin (Hardware). RS0 / RS1 input pins (pin 7 / 9) are used to select RX / TX rate. Status of RS0 / RS1 input pin logic level is reflected to register byte 110 bit 4 / 5 on address A2h. RS0 / RS1 input pin must be "High" for 32GFC or 25GE transmission and "Low" for 16GFC or 8GFC transmission. To have flexible transmission data rate other than 32G/16G/8G FC and 25GE, user may assert TX and/or RX CDR Bypass bits (A2h, Byte 111, [7:6]) to bypass the CDR if required.

## EEPROM Series ID Memory Contents (Address A0h)

| Addr. | Hex | ASCII | Note | Addr. | Hex | ASCII | Note | Addr. | Hex | ASCII | Note | Addr. | Hex | ASCII | Note |
|---|---|---|---|---|---|---|---|---|---|---|---|---|---|---|---|
| 0 | 03 | | SFP28 | 32 | 20 | | | 64 | 18 | | Power Level 1, w/ CDR, Unccooled Tx, Rate Select, Txdis, Txfault, LOS | 96 | 00 | | Vendor specific EEPROM |
| 1 | 04 | | | 33 | 20 | | | 65 | 3A | | | 97 | 00 | | |
| 2 | 07 | | LC | 34 | 20 | | | 66 | 70 | | 28.05Gbps | 98 | 00 | | |
| 3 | 00 | | | 35 | 20 | | | 67 | 00 | | | 99 | 00 | | |
| 4 | 00 | | | 36 | 02 | | 25GBASE-SR | 68 | | | Serial number: each piece with different serial number | 100 | 00 | | |
| 5 | 00 | | | 37 | 00 | | Vendor IEEE OUI | 69 | | | | 101 | 00 | | |
| 6 | 00 | | | 38 | 0E | | | 70 | | | | 102 | 00 | | |
| 7 | 20 | | Intermediate distance (I) | 39 | FA | | | 71 | | | | 103 | 00 | | |
| 8 | 40 | | Shortwave laser w/o OFC (SN) | 40 | 53 | S | Part Number | 72 | | | | 104 | 00 | | |
| 9 | 04 | | M5, M5E | 41 | 50 | P | | 73 | | | | 105 | 00 | | |
| 10 | 68 | | 3200/1600/ 800 Mbytes/sec | 42 | 4D | M | | 74 | | | | 106 | 00 | | |
| 11 | 06 | | 64B/66B | 43 | 2D | - | | 75 | | | | 107 | 00 | | |
| 12 | FF | | > 25.4 Gb/s | 44 | 32 | 2 | | 76 | | | | 108 | 00 | | |
| 13 | 0C | | FC-PI-6 (32/16/ 8G Independent Rx, Tx Rate_ Select) High= 32G only, Low = 16G/8G | 45 | 35 | 5 | | 77 | | | | 109 | 00 | | |
| 14 | 00 | | | 46 | 30 | 0 | | 78 | | | | 110 | 00 | | |
| 15 | 00 | | | 47 | 30 | 0 | | 79 | | | | 111 | 00 | | |
| 16 | 02 | | OM2 50/125um MMF, 20m | 48 | 46 | F | | 80 | | | | 112 | 00 | | |
| 17 | 00 | | | 49 | 57 | W | | 81 | | | | 113 | 00 | | |
| 18 | 0A | | OM4 50/125um MMF, 100m | 50 | 47 | G | | 82 | | | | 114 | 00 | | |
| 19 | 07 | | OM3 50/125um MMF, 70m | 51 | 20 | | | 83 | | | | 115 | 00 | | |
| 20 | 4F | O | Vendor name | 52 | 20 | | | 84 | | Y | Date Code | 116 | 00 | | |
| 21 | 50 | P | | 53 | 20 | | | 85 | | Y | | 117 | 00 | | |
| 22 | 54 | T | | 54 | 20 | | | 86 | | M | | 118 | 00 | | |
| 23 | 4F | O | | 55 | 20 | | | 87 | | M | | 119 | 00 | | |
| 24 | 57 | W | | 56 | 30 | 0 | Revision, depended on version | 88 | | D | | 120 | 00 | | |
| 25 | 41 | A | | 57 | 30 | 0 | | 89 | | D | | 121 | 00 | | |
| 26 | 59 | Y | | 58 | 30 | 0 | | 90 | 20 | | | 122 | 00 | | |
| 27 | 20 | | | 59 | 31 | 1 | | 91 | 20 | | | 123 | 00 | | |
| 28 | 20 | | | 60 | 03 | | 850 nm | 92 | 68 | | Monitoring | 124 | 00 | | |
| 29 | 20 | | | 61 | 52 | | | 93 | F8 | | Soft Control and Monitoring | 125 | 00 | | |
| 30 | 20 | | | 62 | 00 | | Reserved | 94 | 08 | | SFF-8472 V12.3 | 126 | 00 | | |
| 31 | 20 | | | 63 | | | Checksum 0-62 | 95 | | | Checksum 64-94 | 127 | 00 | | |

## EEPROM Series ID Memory Contents (Address A2h)

| Addr. | Hex | Note | Addr. | Hex | Note | Addr. | Hex | Note | Addr. | Hex | Note |
|---|---|---|---|---|---|---|---|---|---|---|---|
| 0 | 4B | Temp. High Alarm (75°C) | 32 | 4D | Rx Power High Alarm (3dBm) | 64 | 00 | For External Cal. | 96 | | Real Time Temp. MSB |
| 1 | 00 | | 33 | F1 | | 65 | 00 | For External Cal. | 97 | | Real Time Temp. LSB |
| 2 | FB | Temp. Low Alarm(-5°C) | 34 | 02 | Rx Power Low Alarm (-12.2dBm) | 66 | 00 | For External Cal. | 98 | | Real Time Vcc MSB |
| 3 | 00 | | 35 | 5B | | 67 | 00 | For External Cal. | 99 | | Real Time Vcc LSB |
| 4 | 49 | Temp. High Warming(73°C) | 36 | 3D | Rx Power High Warming (2dBm) | 68 | 3F | For External Cal. | 100 | | Real Time Tx Bias MSB |
| 5 | 00 | | 37 | E9 | | 69 | 80 | For External Cal. | 101 | | Real Time Tx Bias LSB |
| 6 | 00 | Temp. Low Warming (0°C) | 38 | 03 | Rx Power Low Warming(-10.2dBm) | 70 | 00 | For External Cal. | 102 | | Real Time Tx Pwr MSB |
| 7 | 00 | | 39 | BB | | 71 | 00 | For External Cal. | 103 | | Real Time Tx Pwr LSB |
| 8 | 8C | Voltage High Alarm (3.6V) | 40 | 7F | Reserved | 72 | 00 | For External Cal. | 104 | | Real Time Rx Pwr MSB |
| 9 | A0 | | 41 | FF | Reserved | 73 | 00 | For External Cal. | 105 | | Real Time Rx Pwr LSB |
| 10 | 75 | Voltage Low Alarm(3.0V) | 42 | 80 | Reserved | 74 | 00 | For External Cal. | 106 | | Reserved |
| 11 | 30 | | 43 | 00 | Reserved | 75 | 00 | For External Cal. | 107 | | Reserved |
| 12 | 88 | Voltage High Warming(3.5V) | 44 | 7F | Reserved | 76 | 01 | For External Cal. | 108 | | Reserved |
| 13 | B8 | | 45 | FF | Reserved | 77 | 00 | For External Cal. | 109 | | Reserved |
| 14 | 79 | Voltage Low Warming (3.1V) | 46 | 80 | Reserved | 78 | 00 | For External Cal. | 110 | | Tx Dis, Tx Fault, Rx Los |
| 15 | 18 | | 47 | 00 | Reserved | 79 | 00 | For External Cal. | 111 | | CDR Bypass, OWRAP, EWRAP |
| 16 | 27 | Tx Bias High Alarm(20mA) | 48 | 7F | Reserved | 80 | 01 | For External Cal. | 112 | | Alarm Flag |
| 17 | 10 | | 49 | FF | Reserved | 81 | 00 | For External Cal. | 113 | | Alarm Flag/Reserved |
| 18 | 01 | Tx Bias Low Alarm(1mA) | 50 | 80 | Reserved | 82 | 00 | For External Cal. | 114 | | Reserved |
| 19 | F4 | | 51 | 00 | Reserved | 83 | 00 | For External Cal. | 115 | | Reserved |
| 20 | 1D | Tx Bias High Warming(15mA) | 52 | 7F | Reserved | 84 | 01 | For External Cal. | 116 | | Warming Flag |
| 21 | 4C | | 53 | FF | Reserved | 85 | 00 | For External Cal. | 117 | | Warming Flag/Reserved |
| 22 | 03 | Tx Bias Low Warming(2mA) | 54 | 80 | Reserved | 86 | 00 | For External Cal. | 118 | | RS1 Select |
| 23 | E8 | | 55 | 00 | Reserved | 87 | 00 | For External Cal. | 119 | | Reserved |
| 24 | 4D | Tx Power High Alarm (3dBm) | 56 | 00 | For External Cal. | 88 | 01 | For External Cal. | 120 | | Vendor Specific |
| 25 | F1 | | 57 | 00 | For External Cal. | 89 | 00 | For External Cal. | 121 | | |
| 26 | 07 | Tx Power Low Alarm(-7.2dBm) | 58 | 00 | For External Cal. | 90 | 00 | For External Cal. | 122 | | |
| 27 | 71 | | 59 | 00 | For External Cal. | 91 | 00 | For External Cal. | 123 | | |
| 28 | 3D | Tx Power High Warming(2dBm) | 60 | 00 | For External Cal. | 92 | 00 | For External Cal. | 124 | | |
| 29 | E9 | | 61 | 00 | For External Cal. | 93 | 00 | For External Cal. | 125 | | |
| 30 | 09 | Tx Power Low Warming (-6.2dBm) | 62 | 00 | For External Cal. | 94 | 00 | For External Cal. | 126 | | |
| 31 | 5F | | 63 | 00 | For External Cal. | 95 | | Check Sum | 127 | | |

Note: Address 128 – 247: customer R/W eeprom. Address 248 – 255: Vendor Specific.

## REVISION HISTORY

| Version | Subject | Release Date |
|---|---|---|
| 1.0 | Initial datasheet | 2019/2/20 |
| 1.1 | Revise EEPROM A0h content | 2020/4/27 |
| | | |
| | | |

S-F-P-R-D Network Optical Equipment