Features

- 1.25Gbps data links
- 80km transmission distance with 9/125 µm SMF
- 1550nm un-cooled DFB laser
- PIN photodiode receiver
- Class I laser product
- Digital diagnostic monitor interface Compatible with SFF-8472
- SFP MSA package with duplex LC receptacle
- Single 3.3V power supply
- Operating case temperature:
  Standard: -5 to +70°C
  Industrial: -40 to +85°C
- RoHS compliant

Regulatory Compliance

Table 1 - Regulatory Compliance

Feature	Standard	Performance
Electrostatic Discharge (ESD) to the Electrical Pins	MIL-STD-883E Method 3015.7	Class 1
Electrostatic Discharge (ESD) to the Duplex LC Receptacle	IEC 61000-4-2	Compliant with standards
Electromagnetic Interference (EMI)	FCC Part 15 Class B	Compliant with standards
Laser Eye Safety	FDA 21CFR 1040.10 and 1040.11 EN (IEC) 60825-1,2	Compliant with Class I laser product.
RoHS	2011/65/EC	Compliant with RoHS

Absolute Maximum Ratings

Table 2 - Absolute Maximum Ratings

Parameter	Symbol	Min.	Typical	Max.	Unit	Notes
Storage Temperature	T_S	-40	-	+85	°C	
Supply Voltage	V_{CC}	-0.5	-	+3.6	V	
Operating Relative Humidity	RH	+5	-	+95	%	

Recommended Operating Conditions

Table 3 – Recommended Operating Conditions

Parameter		Symbol	Min.	Typical	Max.	Unit	Notes
Operating Case Temperature	SP-GB-ZX-CDFC	T_c	-5		+70	°C	
	SP-GB-ZX-IDFC		-40		+85		
Power Supply Voltage		V_{CC}	3.13	3.3	3.47	V	
Power Supply Current		I_{CC}	-		300	mA	
Power Dissipation		P_D	-	-	1	W	
Data Rate				1.25		Gbps	

Optical Characteristics

Table 4 – Optical Characteristics

Transmitter						
Parameter	**Symbol**	**Min.**	**Typical**	**Max.**	**Unit**	**Notes**
Centre Wavelength	λ_C	1500	1550	1580	nm	
Average Output Power	P_{0ut}	0		+5	dBm	1
P_{0ut}@TX Disable Asserted	P_{0ut}			-45	dBm	1
Spectral Width (-20dB)	σ			1	nm	
Side Mode Suppression Ratio	SMSR	30			dB	
Extinction Ratio	EX	9			dB	
Rise/Fall Time (20%～80%)	t_r/t_f			0.26	ns	2
Total Jitter	TJ			0.481	UI	3
Deterministic Jitter	DJ			0.25	UI	3
Output Optical Eye	IEEE 802.3z and ANSI Fibre Channel Compatible					4
Receiver						
Centre Wavelength	λ_C	1260		1580	nm	
Receiver Sensitivity				-23	dBm	5
Receiver Overload		-3			dBm	
Return Loss		12			dB	
LOS De-Assert	LOS_D			-23	dBm	
LOS Assert	LOS_A	-35			dBm	
LOS Hysteresis		1		4	dB	

Notes:

1. The optical power is launched into SMF.
2. Unfiltered, measured with a PRBS 2^7-1 test pattern @1.25Gbps
3. Measured with a PRBS 2^7-1 test pattern@1.25Gbps, meet the specified maximum output jitter

requirements if the specified maximum input jitter is present.

4. Measured with a PRBS 2^7-1 test pattern @1.25Gbps.
5. Measured with a PRBS 2^7-1 test pattern @1.25Gbps, extinction ratio ER=9dB, BER ≤1×10^{-12}

Electrical Characteristics

Table 5 – Electrical Characteristics

Parameter	Symbol	Min.	Typical	Max.	Unit	Notes
Transmitter						
Data Input Swing Differential	V_{IN}	500		2400	mV	1
Input Differential Impedance	Z_{IN}	90	100	110	Ω	
Tx_DIS Disable	V_D	2.0		V_{CC}	V	
Tx_DIS Enable	V_{EN}	GND		GND+0.8	V	
TX_ Fault (Fault)		2.0		Vcc+0.3	V	
TX_ Fault (Normal)		0		0.8	V	
Receiver						
Data Output Swing Differential	V_{OUT}	370		2000	mV	1
Rx_LOS Fault	$V_{LOS\text{-}Fault}$	2.0		Vcc+0.3	V	
Rx_LOS Normal	$V_{LOS\text{-}Normal}$	GND		GND+0.8	V	

Notes:

1. Internally AC coupled

Recommended Host Board Power Supply Circuit

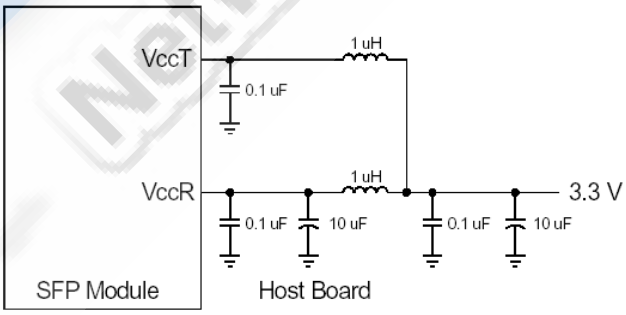

Figure 1, Recommended Host Board Power Supply Circuit

Recommended Interface Circuit

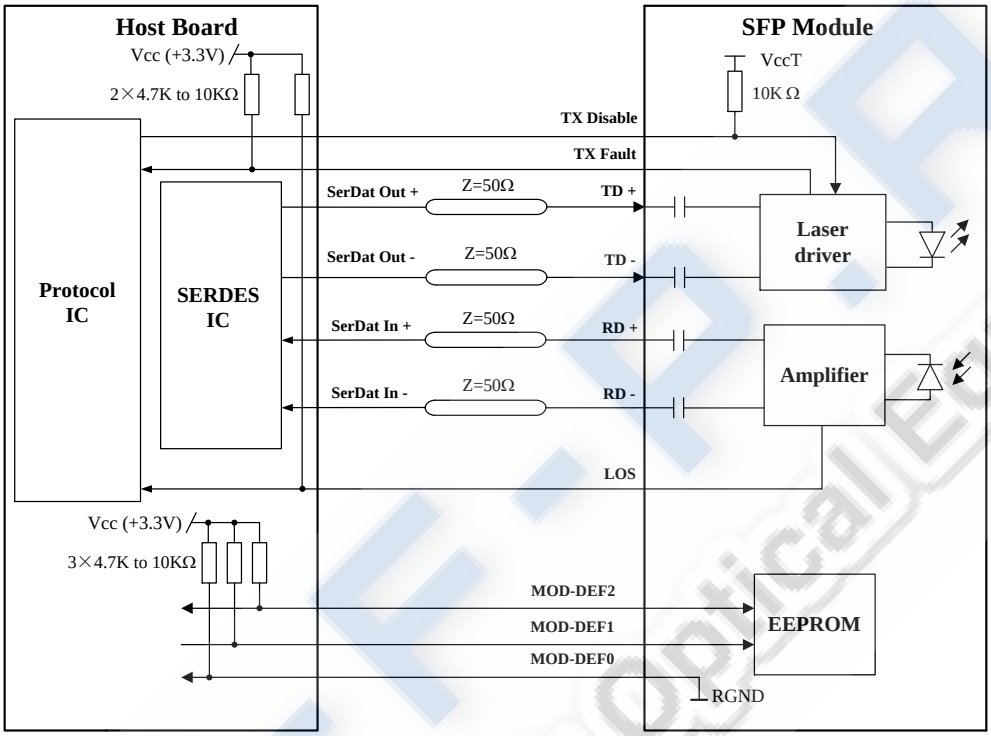

Figure 2, Recommended Interface Circuit

Pin Definitions

Figure 3 below shows the pin numbering of SFP electrical interface. The pin functions are described in Table 6 with some accompanying notes.

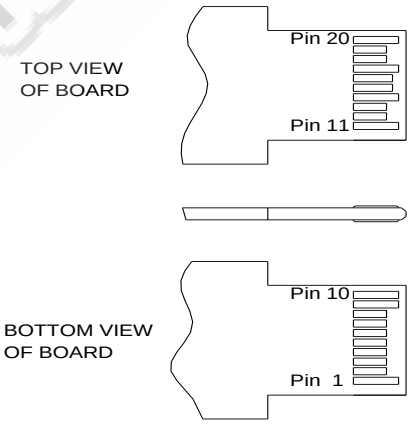

Figure 3, Pin View

Table 6 - Pin Function Definitions

Pin No.	Name	Function	Plug Seq.	Notes
1	VeeT	Transmitter Ground	1	

2	TX Fault	Transmitter Fault Indication	3	Note 1
3	TX Disable	Transmitter Disable	3	Note 2
4	MOD-DEF2	Module Definition 2	3	Note 3
5	MOD-DEF1	Module Definition 1	3	Note 3
6	MOD-DEF0	Module Definition 0	3	Note 3
7	Rate Select	Not Connected	3	
8	LOS	Loss of Signal	3	Note 4
9	VeeR	Receiver Ground	1	
10	VeeR	Receiver Ground	1	
11	VeeR	Receiver Ground	1	
12	RD-	Inv. Received Data Out	3	Note 5
13	RD+	Received Data Out	3	Note 5
14	VeeR	Receiver Ground	1	
15	VccR	Receiver Power	2	
16	VccT	Transmitter Power	2	
17	VeeT	Transmitter Ground	1	
18	TD+	Transmit Data In	3	Note 6
19	TD-	Inv. Transmit Data In	3	Note 6
20	VeeT	Transmitter Ground	1	

Notes:

1. TX Fault is an open collector output, which should be pulled up with a 4.7k~10kΩ resistor on the host board to a voltage between 2.0V and Vcc+0.3V. Logic 0 indicates normal operation; logic 1 indicates a laser fault of some kind. In the low state, the output will be pulled to less than 0.8V.
2. TX Disable is an input that is used to shut down the transmitter optical output. It is pulled up within the module with a 4.7k~10kΩ resistor. Its states are:
   Low (0~0.8V): Transmitter on
   (>0.8V, <2.0V): Undefined
   High (2.0~3.465V): Transmitter Disabled
   Open: Transmitter Disabled
3. MOD-DEF 0, 1, 2 are the module definition pins. They should be pulled up with a 4.7k~10kΩ resistor on the host board. The pull-up voltage shall be VccT or VccR.
   MOD-DEF 0 is grounded by the module to indicate that the module is present
   MOD-DEF 1 is the clock line of two wires serial interface for serial ID
   MOD-DEF 2 is the data line of two wires serial interface for serial ID
4. LOS is an open collector output, which should be pulled up with a 4.7k~10kΩ resistor on the host board to a voltage between 2.0V and Vcc+0.3V. Logic 0 indicates normal operation; logic 1 indicates loss of signal. In the low state, the output will be pulled to less than 0.8V.
5. These are the differential receiver output. They are internally AC-coupled 100Ω differential lines which should be terminated with 100Ω (differential) at the user SERDES.
6. These are the differential transmitter inputs. They are AC-coupled, differential lines with 100Ω differential termination inside the module.

EEPROM Information

The SFP MSA defines a 256-byte memory map in EEPROM describing the transceiver's capabilities, standard interfaces, manufacturer, and other information, which is accessible over a 2 wire serial interface at the 8-bit address 1010000X (A0h). The memory contents refer to Table 7.

Table 7 - EEPROM Serial ID Memory Contents (A0h)

Addr.	Field Size (Bytes)	Name of Field	Hex	Description
0	1	Identifier	03	SFP
1	1	Ext. Identifier	04	MOD4
2	1	Connector	07	LC
3—10	8	Transceiver	00 00 00 02 12 00 01 01	1000BASE-LX,long distance (L); Longwave laser (LC)
11	1	Encoding	01	8B10B
12	1	BR, nominal	0D	1.25Gbps
13	1	Reserved	00	
14	1	Length (9um)-km	50	80km
15	1	Length (9um)	FF	80km
16	1	Length (50um)	00	
17	1	Length (62.5um)	00	
18	1	Length (copper)	00	
19	1	Reserved	00	
20—35	16	Vendor name	53 4F 55 52 43 45 50 48 4F 54 4F 4E 49 43 53 20	"SOURCEPHOTONICS"(ASCⅡ)
36	1	Reserved	00	
37—39	3	Vendor OUI	00 1F 22	
40—55	16	Vendor PN	53 50 47 42 5A 58 xx 44 46 43 20 20 20 20 20 20	"SPGBZXxDFC " (ASCⅡ)
56—59	4	Vendor rev	31 30 20 20	ASCⅡ("31 30 20 20" means 1.0 revision)
60-61	2	Wavelength	06 0E	1550nm
62	1	Reserved	00	
63	1	CC BASE	xx	Check sum of bytes 0 - 62
64—65	2	Options	00 1A	LOS, TX_FAULT and TX_DISABLE
66	1	BR, max	00	
67	1	BR, min	00	
68—83	16	Vendor SN	xx xx xx xx xx xx xx xx xx xx xx xx xx xx xx xx	ASCⅡ
84—91	8	Vendor date code	xx xx xx xx xx xx 20 20	Year (2 bytes), Month (2 bytes), Day (2 bytes)
92	1	Diagnostic type	58	Diagnostics (External. Cal)

93	1	Enhanced option	B0	Diagnostics(Optional Alarm/warning flags, Soft TX_FAULT and Soft TX_LOS monitoring)
94	1	SFF-8472	02	Diagnostics(SFF-8472 Rev 9.5)
95	1	CC_EXT	xx	Check sum of bytes 64 - 94
96—255	160	Vendor specific		

Note: The “xx” byte should be filled in according to practical case. For more information, please refer to the related document of SFF-8472 Rev 9.5.

Monitoring Specification

The digital diagnostic monitoring interface also defines another 256-byte memory map in EEPROM, which makes use of the 8 bit address 1010001X (A2h). Please see Figure 4. For detail EEPROM information, please refer to the related document of SFF-8472 Rev 9.5. The monitoring specification of this product is described in Table 8.

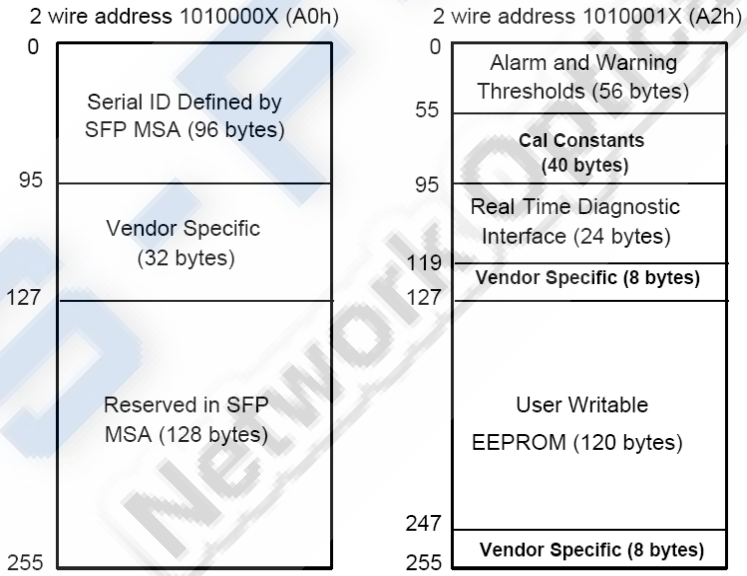

Figure 4, EEPROM Memory Map Specific Data Field Descriptions

Table 8 - Monitoring Specification

Parameter		Range	Accuracy	Calibration
Temperature	SP-GB-ZX-CDFC	-10 to +80°C	±3°C	External
	SP-GB-ZX-IDFC	-40 to +95°C	±3°C	External
Voltage		3.135 to 3.465V	±3%	External
Bias Current		3 to 60mA	±10%	External
TX Power		0 to +5dBm	±3dB	External
RX Power		-23 to -3dBm	±3dB	External

Mechanical Diagram

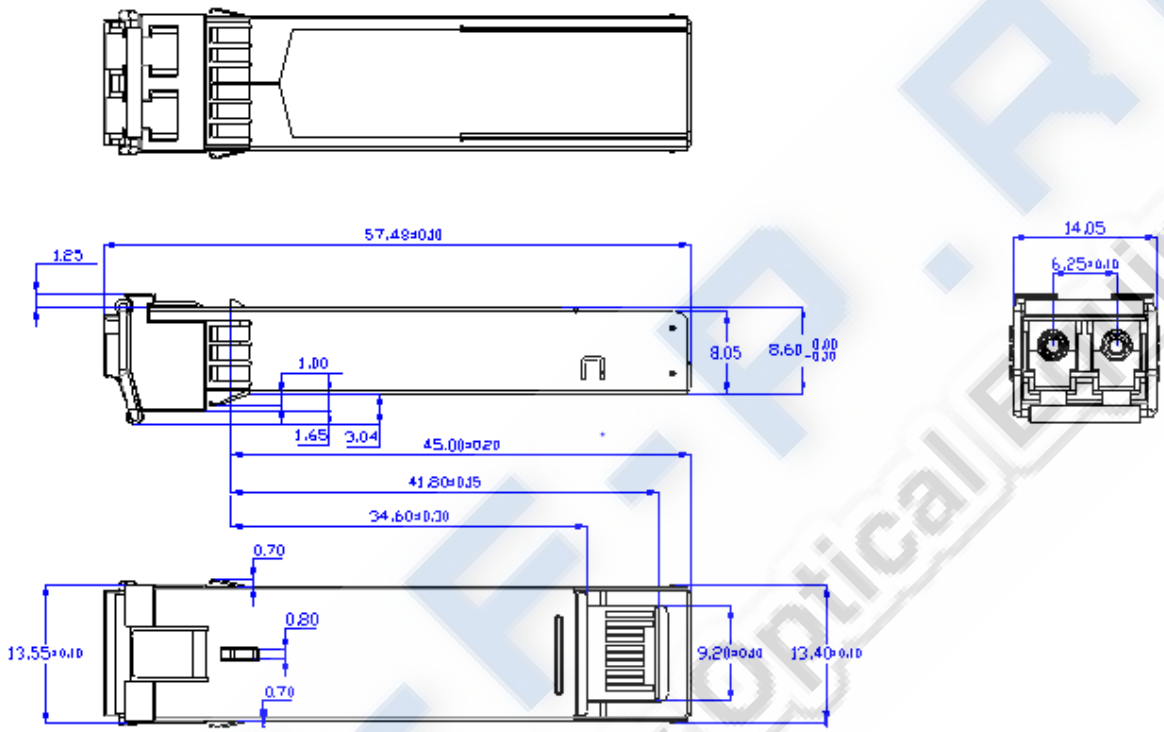

Figure 5, Mechanical Design Diagram of the SFP

Order Information

Table 9 – Order Information

Part No.	Case Temperature	Application	Data Rate	Laser Source	Fiber Type
SP-GB-ZX-CDFC	-5 to 70^{0}C	1000BASE-ZX	1.25Gbps	1550nm DFB	SMF
SP-GB-ZX-IDFC	-40 to 85^{0}C	1000BASE-ZX	1.25Gbps	1550nm DFB	SMF

Warnings

Handling Precautions: This device is susceptible to damage as a result of electrostatic discharge (ESD). A static free environment is highly recommended. Follow guidelines according to proper ESD procedures.

Laser Safety: Radiation emitted by laser devices can be dangerous to human eyes. Avoid eye exposure to direct or indirect radiation.

Legal Notice

IMPORTANT NOTICE!

All information contained in this document is subject to change without notice, at Source Photonics's sole and absolute discretion. Source Photonics warrants performance of its products to current specifications only in accordance with the company's standard one-year warranty; however, specifications designated as "preliminary" are given to describe components only, and Source Photonics expressly disclaims any and all warranties for said products, including express, implied, and statutory warranties, warranties of merchantability, fitness for a particular purpose, and non-infringement of proprietary rights. Please refer to the company's Terms and Conditions of Sale for further warranty information.

Source Photonics assumes no liability for applications assistance, customer product design, software performance, or infringement of patents, services, or intellectual property described herein. No license, either express or implied, is granted under any patent right, copyright, or intellectual property right, and Source Photonics makes no representations or warranties that the product(s) described herein are free from patent, copyright, or intellectual property rights. Products described in this document are NOT intended for use in implantation or other life support applications where malfunction may result in injury or death to persons. Source Photonics customers using or selling products for use in such applications do so at their own risk and agree to fully defend and indemnify Source Photonics for any damages resulting from such use or sale.

THE INFORMATION CONTAINED IN THIS DOCUMENT IS PROVIDED ON AN "AS IS" BASIS. Customer agrees that Source Photonics is not liable for any actual, consequential, exemplary, or other damages arising directly or indirectly from any use of the information contained in this document. Customer must contact Source Photonics to obtain the latest version of this publication to verify, before placing any order, that the information contained herein is current.

Contact

U.S.A. Headquarters
8521 Fallbrook Avenue
Suite 200, West Hills,
CA 91304USA
Tel: +1-818-773-9044
Fax: +1-818-773-0261

China
Building #2&5, West Export Processing Zone
No. 8 Kexin Road, Hi-Tech Zone
Chengdu, 611731, China
Tel: +86-28-8795-8788
Fax: +86-28-8795-8789

Taiwan
9F, No 81, Shui Lee Rd.
Hsinchu, Taiwan, R.O.C.
Tel: +886-3-5169222
Fax: +886-3-5169213

© Copyright Source Photonics, Inc. 2007~2016
All rights reserved